US 20190013363A1

(19) United States

(12) Patent Application Publication

JOO et al.

(10) Pub. No.: US 2019/0013363 A1

(43) Pub. Date: Jan. 10, 2019

(54) **ORGANIC LIGHT EMITTING DISPLAY DEVICE**

(71) Applicant: **Samsung Display Co. Ltd.**, Yongin-si (KR)

(72) Inventors: **Sun Kyu JOO**, Suwon-si (KR); **Byung Chul KIM**, Suwon-si (KR); **Sung Chul KIM**, Seongnam-si (KR); **Su Jeong KIM**, Yongin-si (KR); **In Ok KIM**, Osan-si (KR); **Hye Ran MUN**, Yangju-si (KR); **In Seok SONG**, Pocheon-si (KR); **Keun Chan OH**, Hwaseong-si (KR); **Jae Jin LYU**, Yongin-si (KR); **Yui Ku LEE**, Asan-si (KR)

(21) Appl. No.: **15/898,346**

(22) Filed: **Feb. 16, 2018**

(30) **Foreign Application Priority Data**

Jul. 4, 2017 (KR) 10-2017-0085074

Publication Classification

(51) **Int. Cl.**

H01L 27/32	(2006.01)
H01L 51/50	(2006.01)
H01L 51/52	(2006.01)
H01L 51/56	(2006.01)

(52) **U.S. Cl.**

CPC ***H01L 27/322*** (2013.01); ***H01L 51/5056*** (2013.01); ***H01L 51/5092*** (2013.01); ***H01L 27/3211*** (2013.01); ***H01L 51/5203*** (2013.01); ***H01L 51/56*** (2013.01); ***H01L 51/5072*** (2013.01)

(57) **ABSTRACT**

An organic light emitting display device comprising: a substrate; a first pixel electrode disposed on the substrate; a pixel defining film disposed on the first pixel electrode and having a first opening at least partially exposing the first pixel electrode; a first organic light emitting layer disposed on the pixel defining film and overlapping with the first opening of the pixel defining film; and a black matrix disposed on the first organic light emitting layer and having a first opening overlapping with the first organic light emitting layer. Light having passed through the first opening of the black matrix is one of red light, green light, and blue light. The first opening of the black matrix may have a shape with a curved portion.

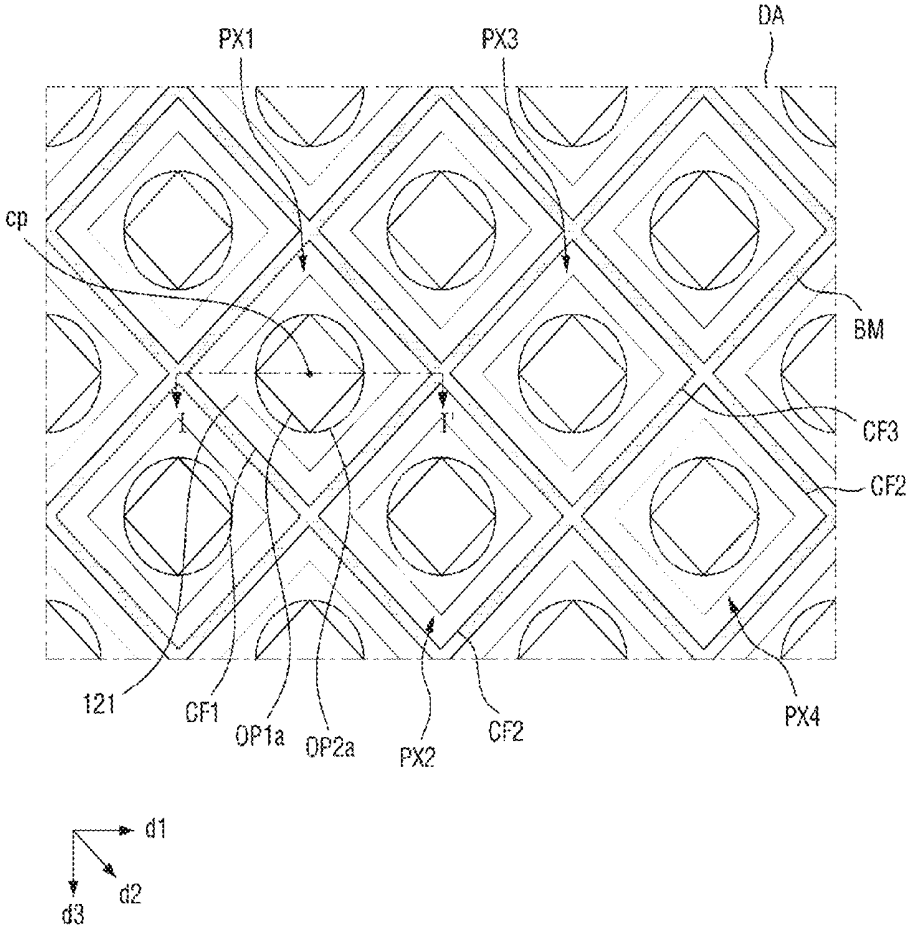

FIG. 1

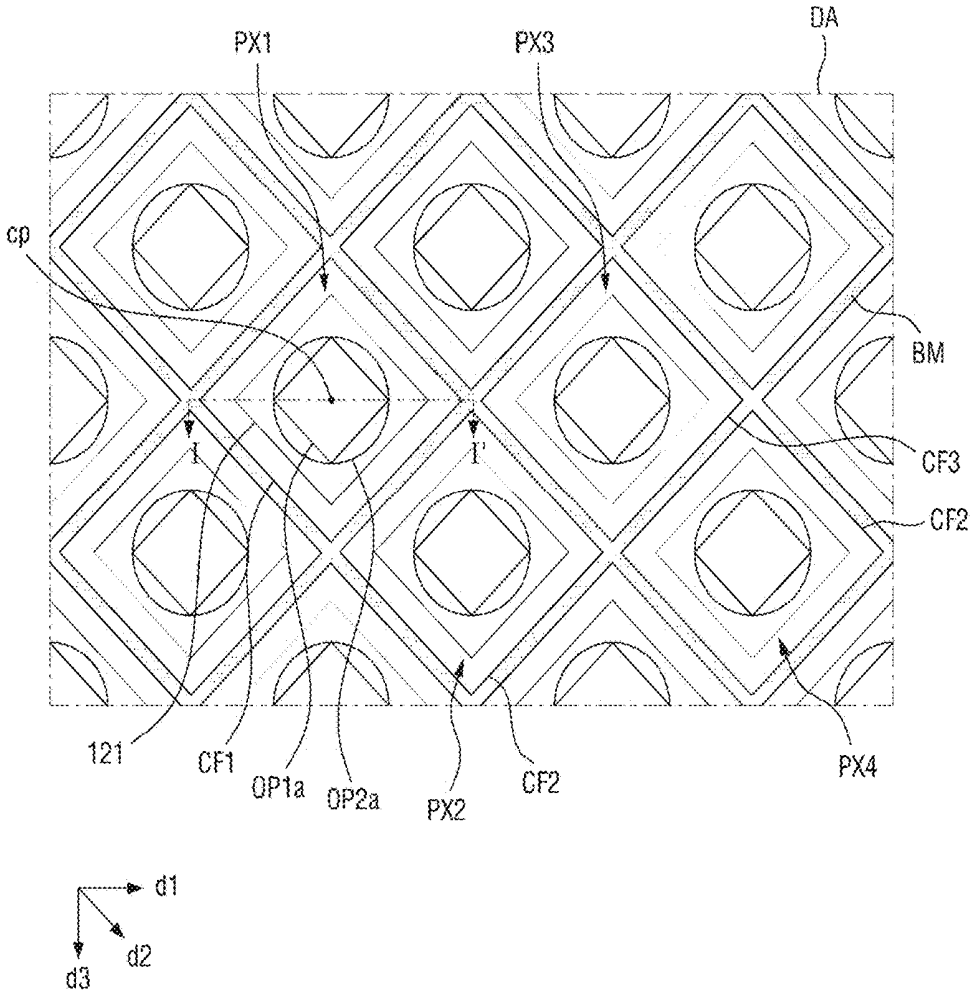

FIG. 2

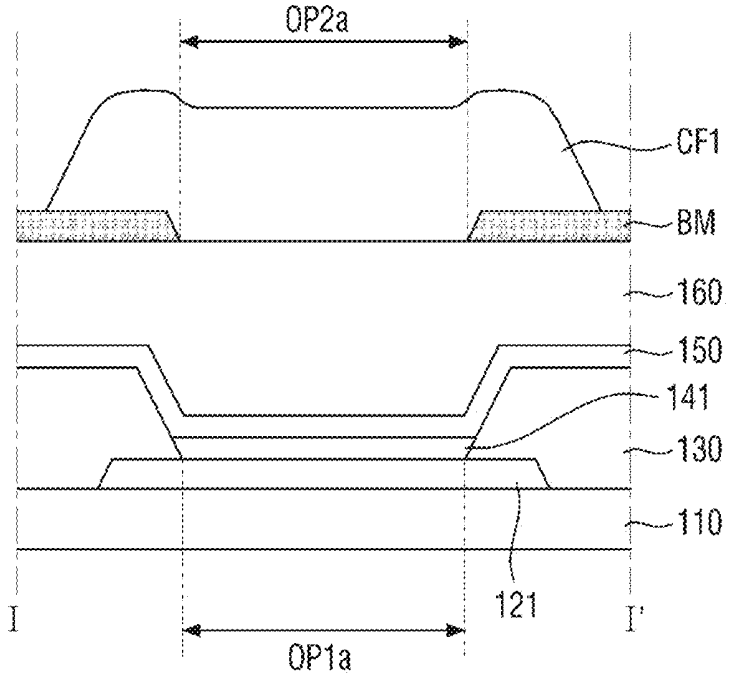

FIG. 3

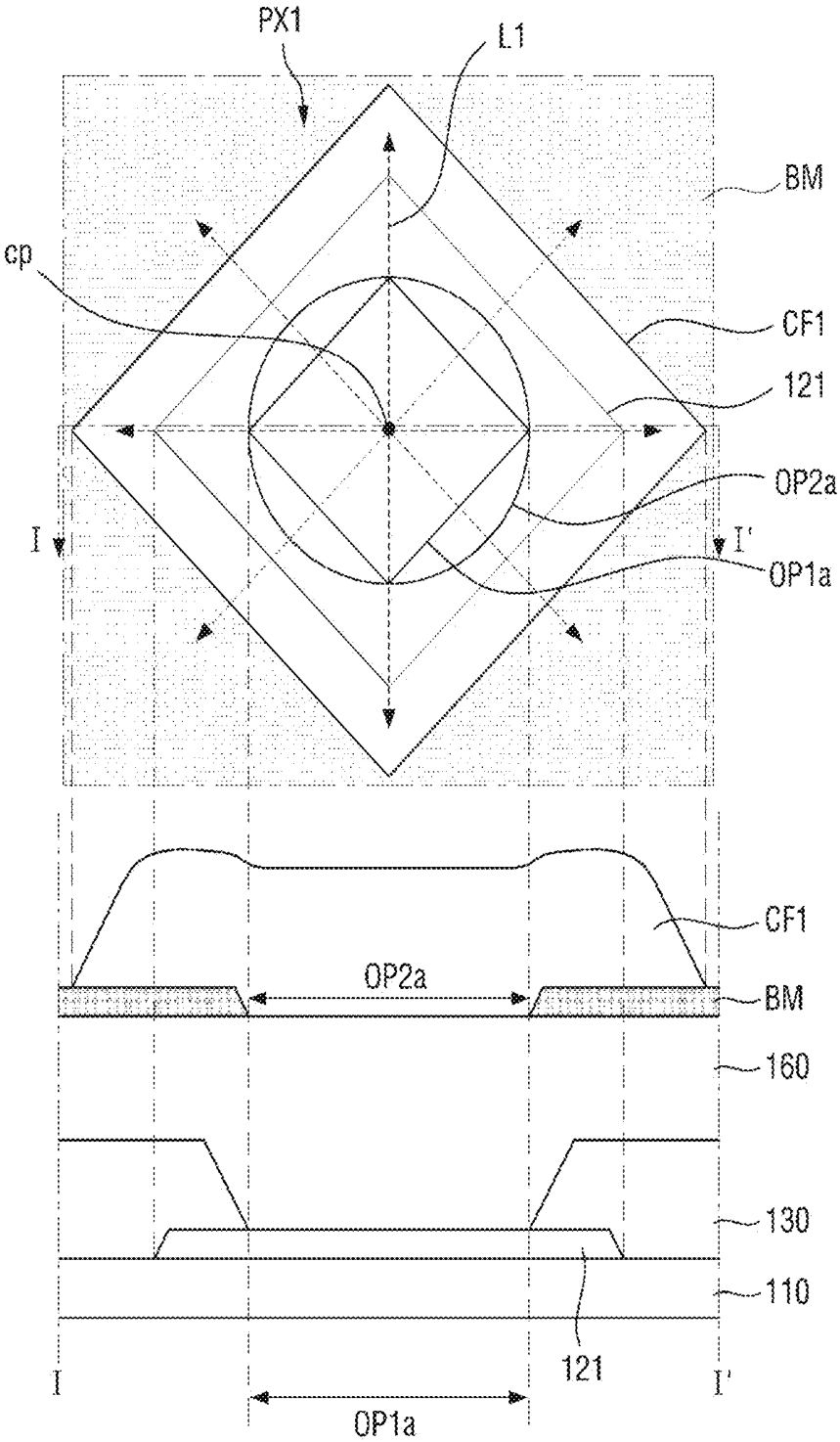
PX1
L1
BM
cp
CF1
121
OP2a
I
I'
OP1a
CF1
OP2a
BM
160
130
110
121
I
I'
OP1a

FIG. 4

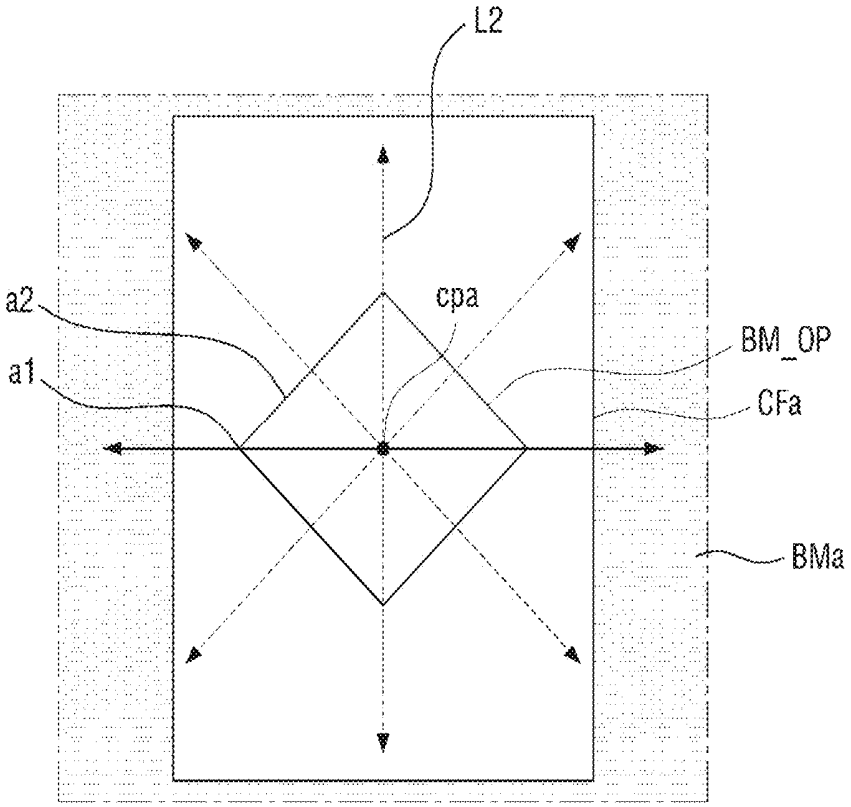

FIG. 5

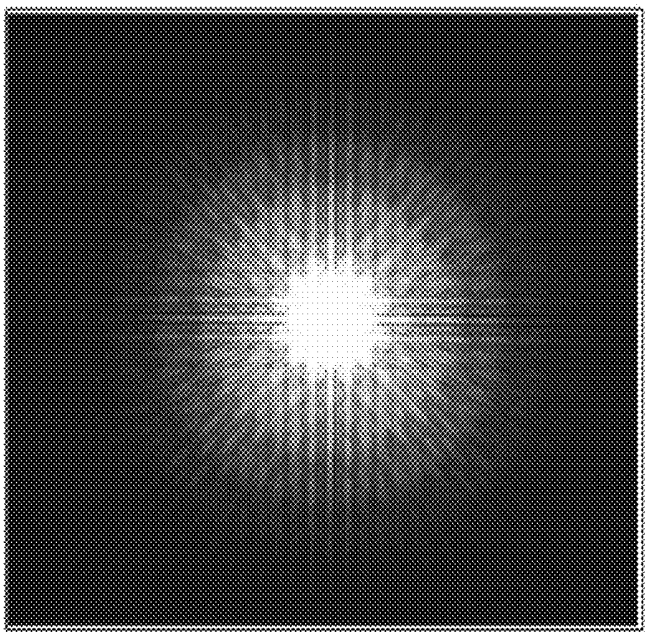

FIG. 6

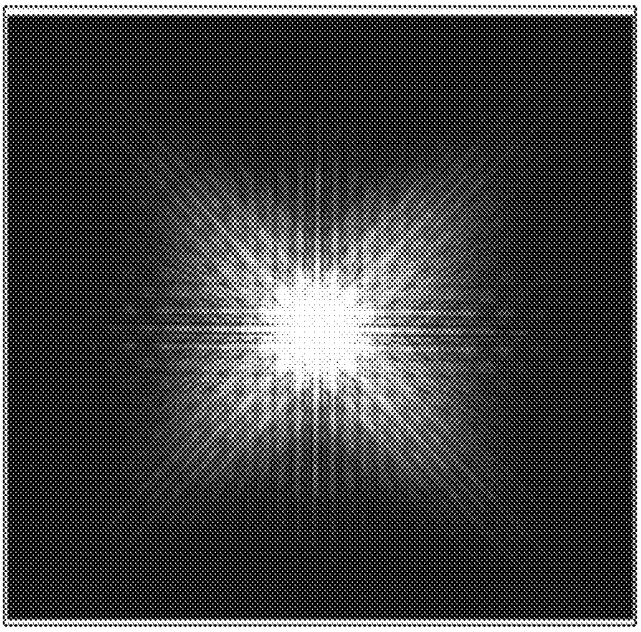

FIG. 7

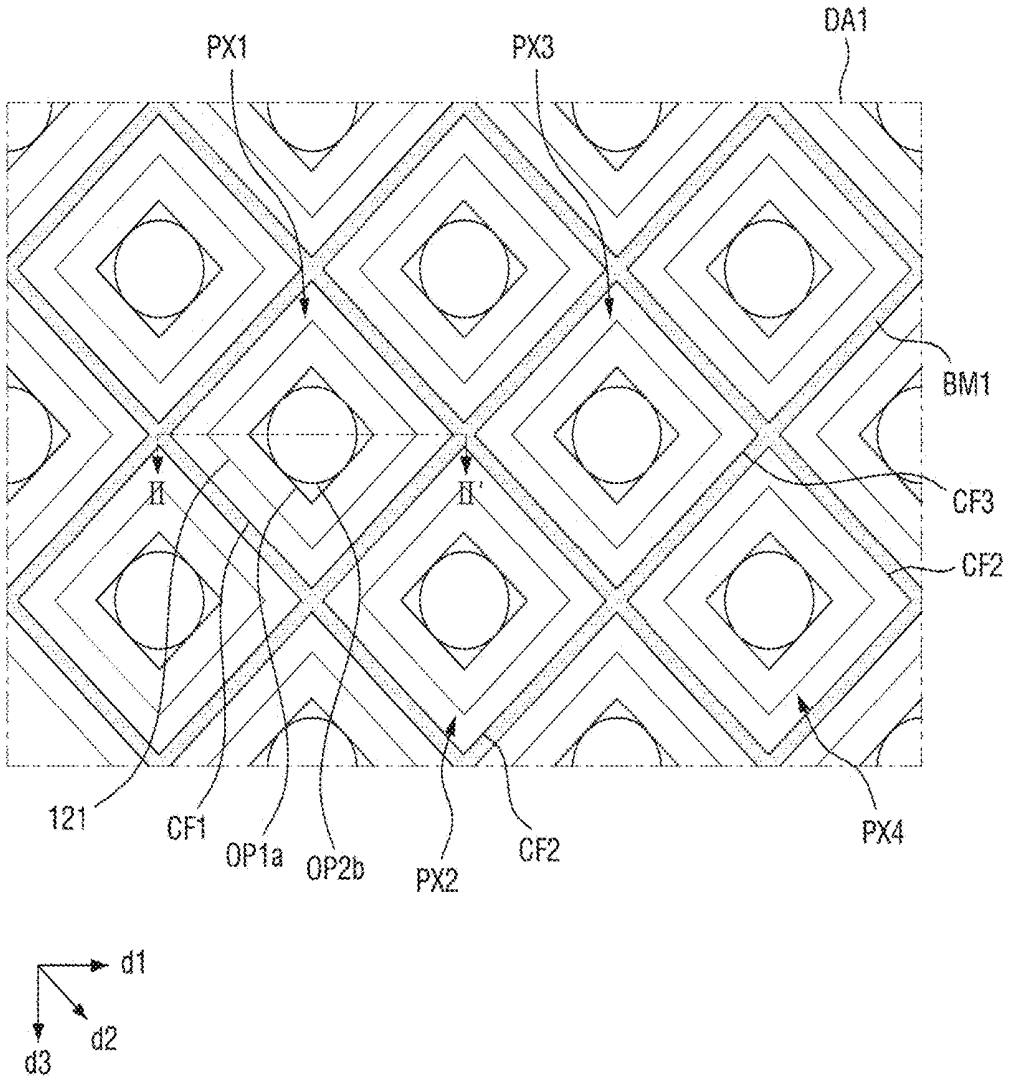
PX1
PX3
DA1
BM1
CF3
CF2
II
II'
121
CF1
OP1a
OP2b
PX2
CF2
PX4
d1
d2
d3

FIG. 8

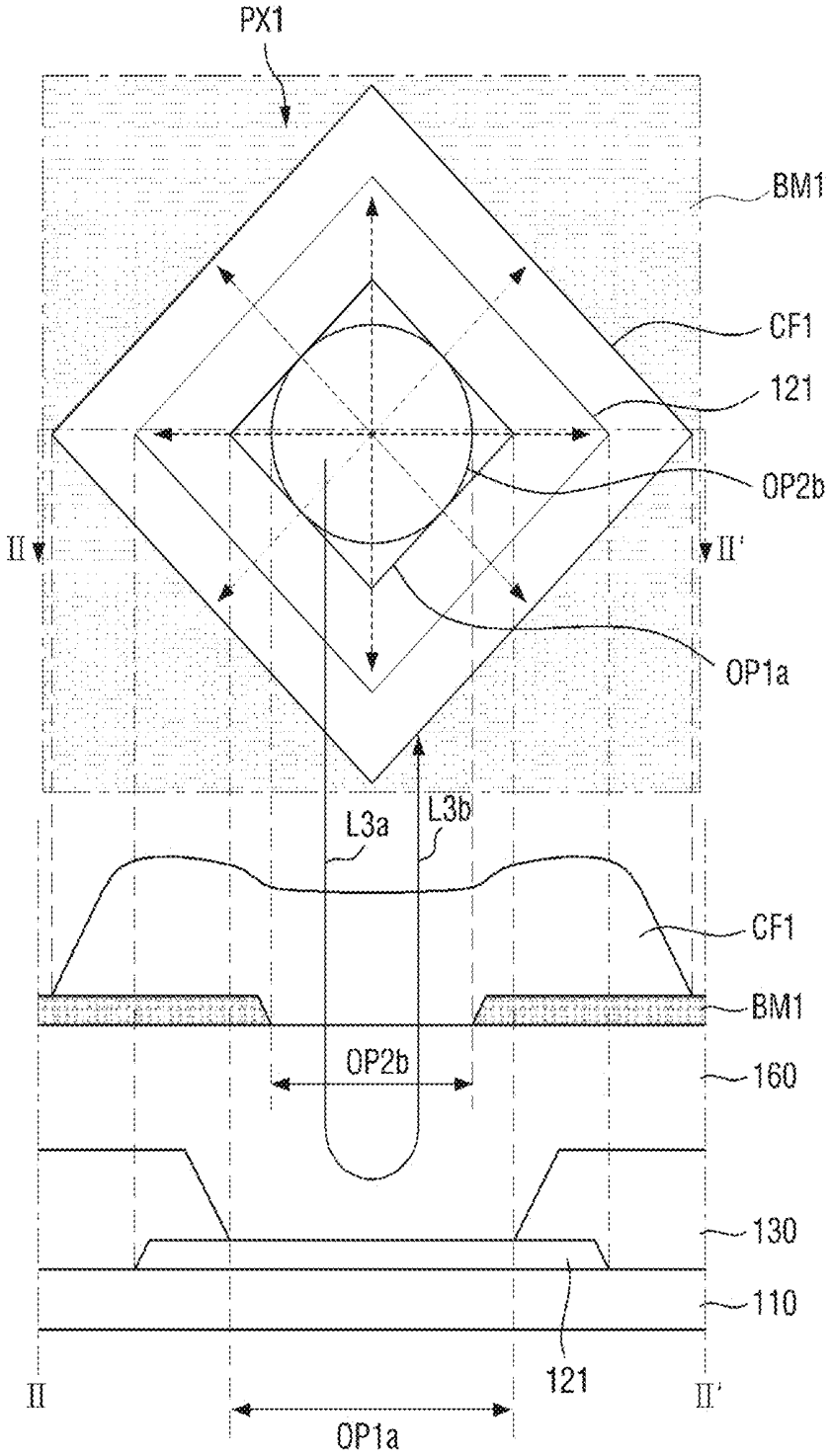
PX1
BM1
CF1
121
OP2b
II
II'
OP1a
L3a
L3b
CF1
BM1
OP2b
160
130
110
121
II
II'
OP1a

FIG. 9

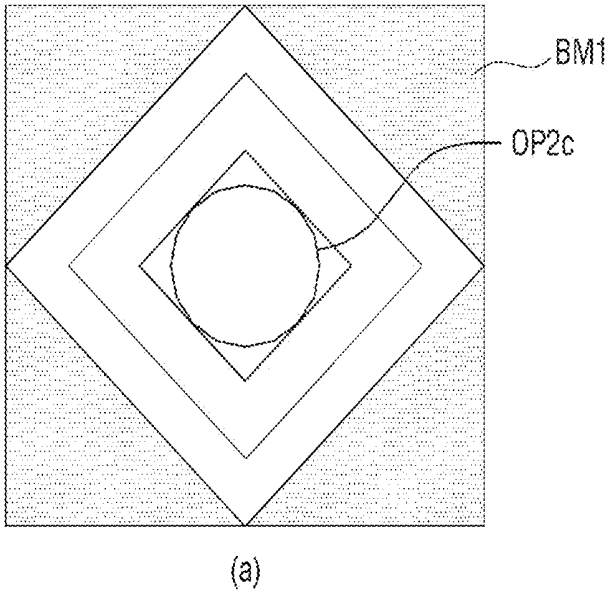

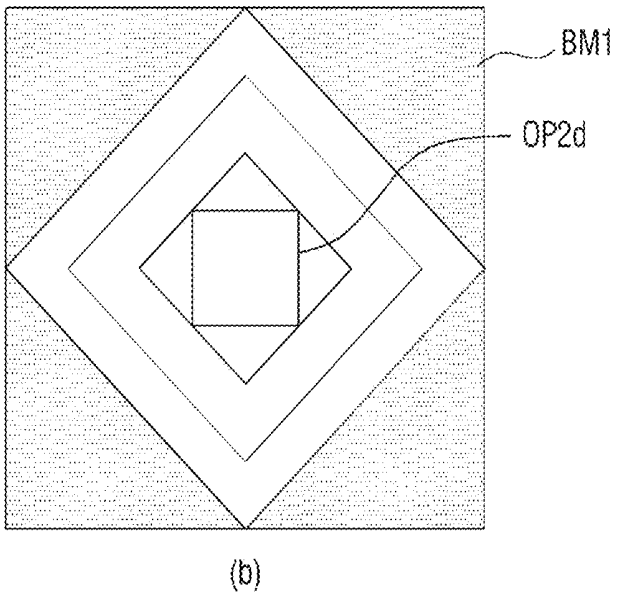

FIG. 10

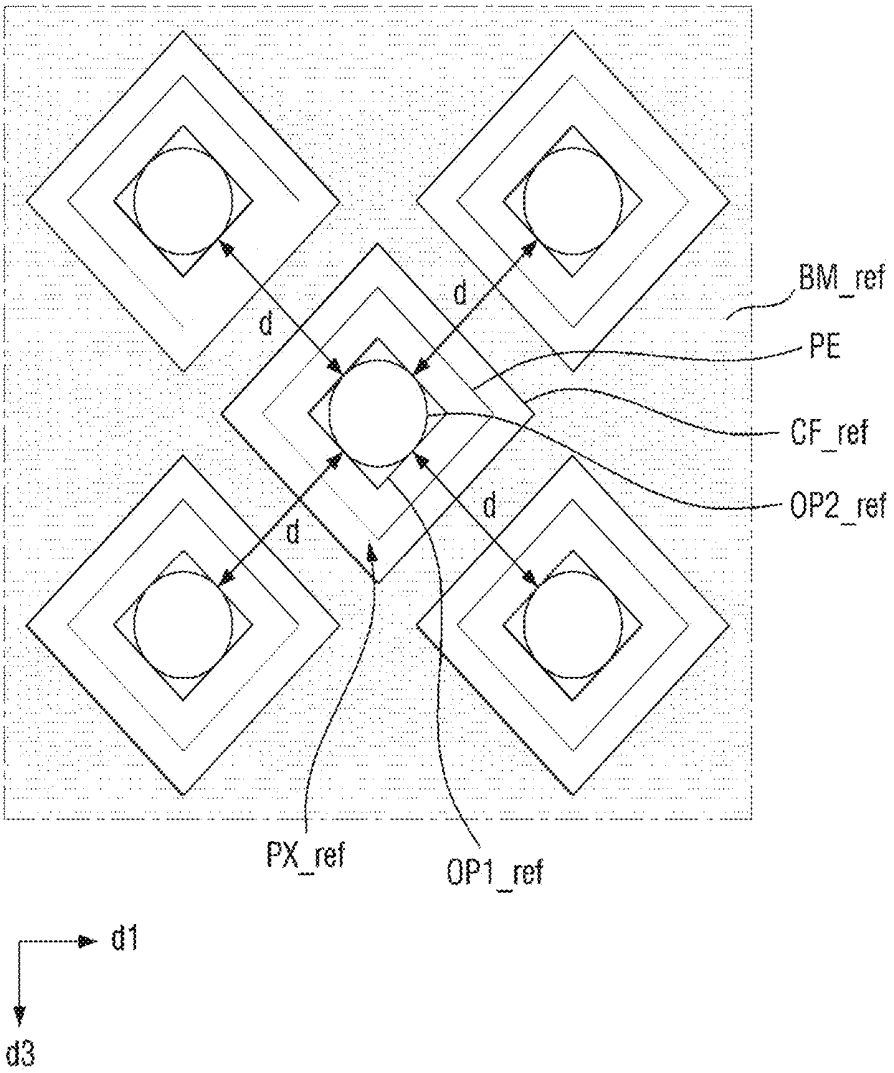

FIG. 11

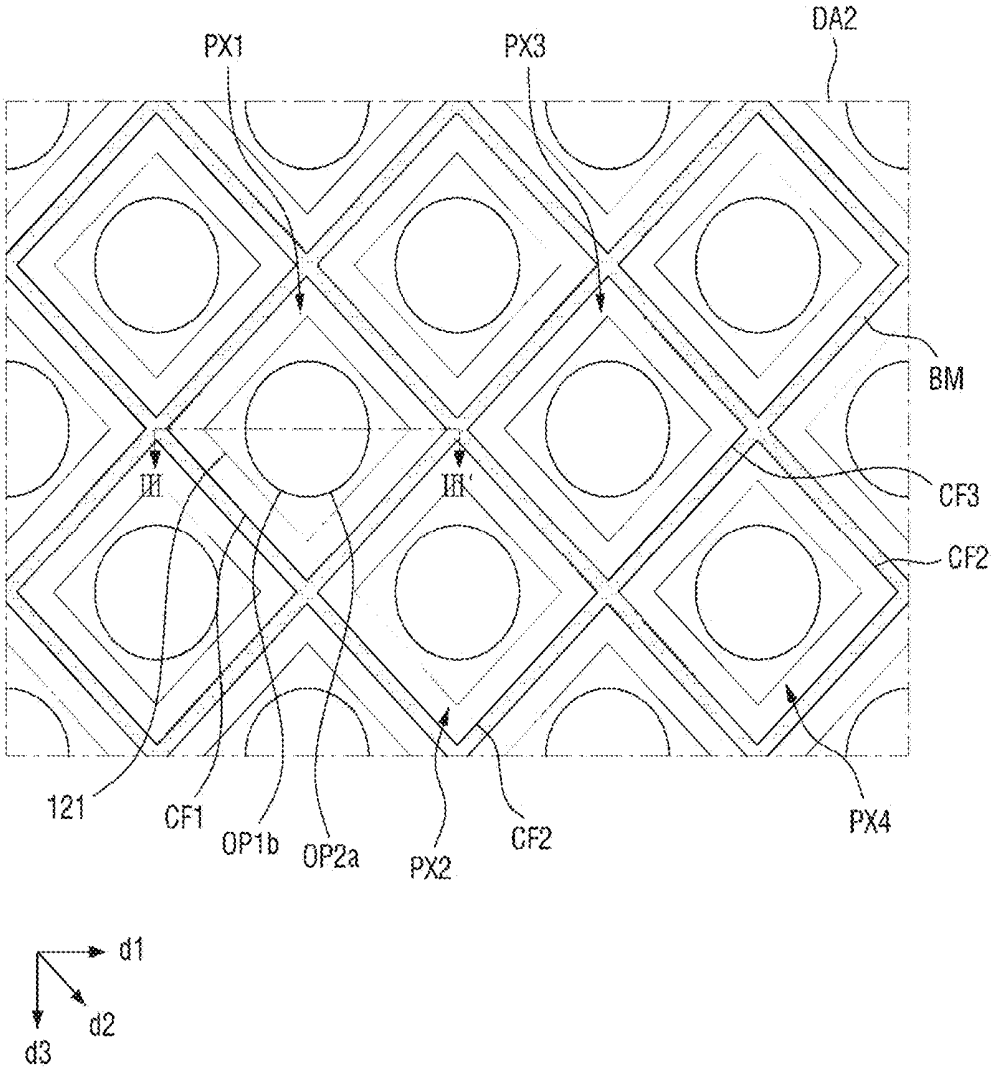
DA2
PX1
PX3
BM
III
III'
CF3
CF2
121
CF1
OP1b
OP2a
PX2
CF2
PX4
d1
d2
d3

FIG. 12

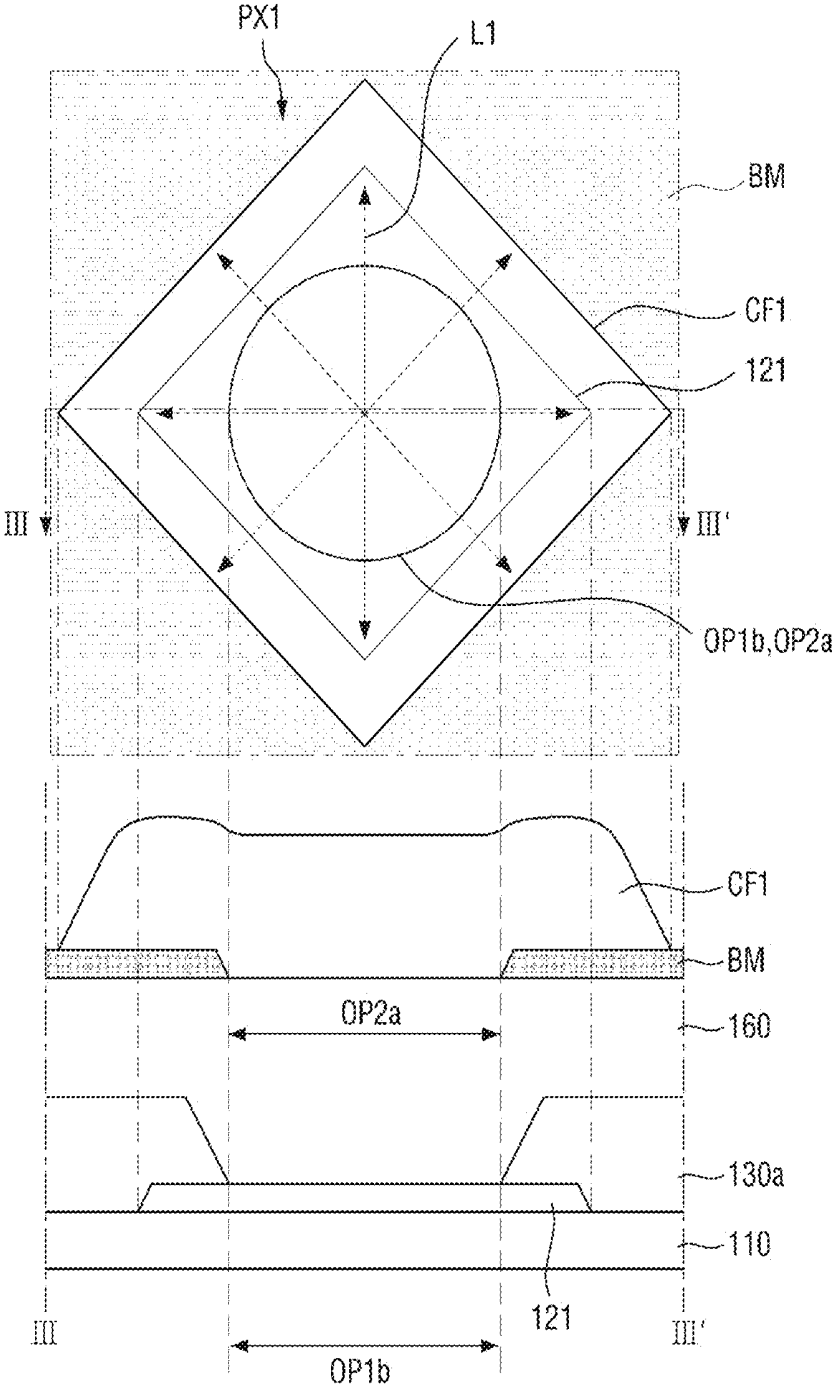
PX1
L1
BM
CF1
121
III
III'
OP1b,OP2a
CF1
BM
OP2a
160
130a
110
121
III
III'
OP1b

FIG. 13

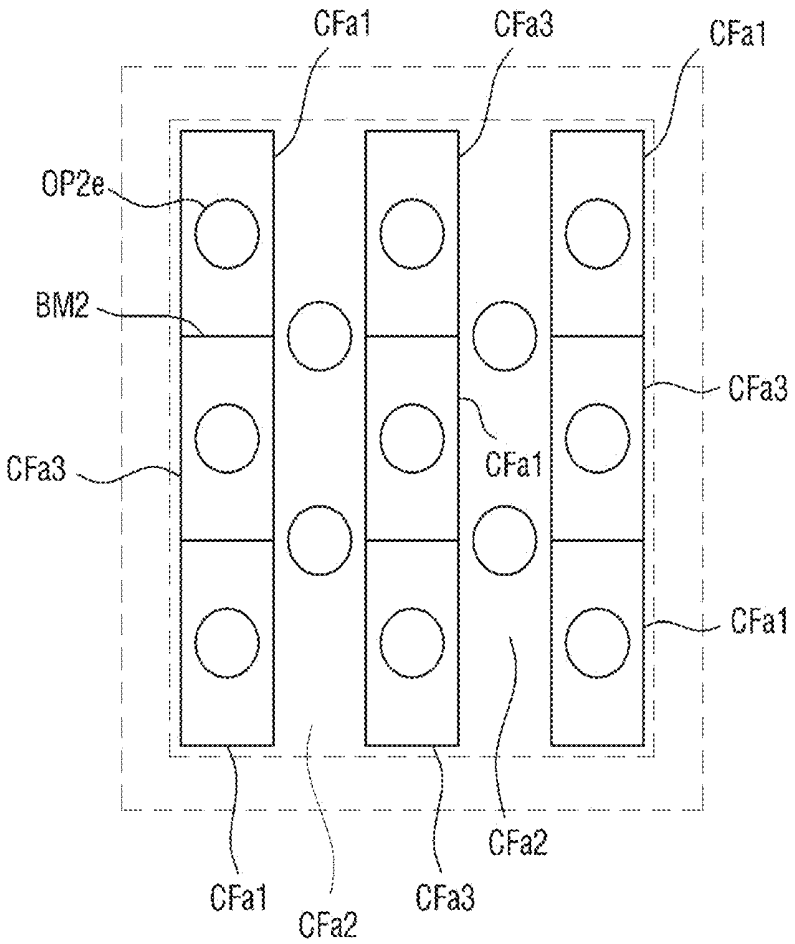
CFa1
CFa3
CFa1
OP2e
BM2
CFa3
CFa3
CFa1
CFa1
CFa2
CFa1
CFa2
CFa3

FIG. 14

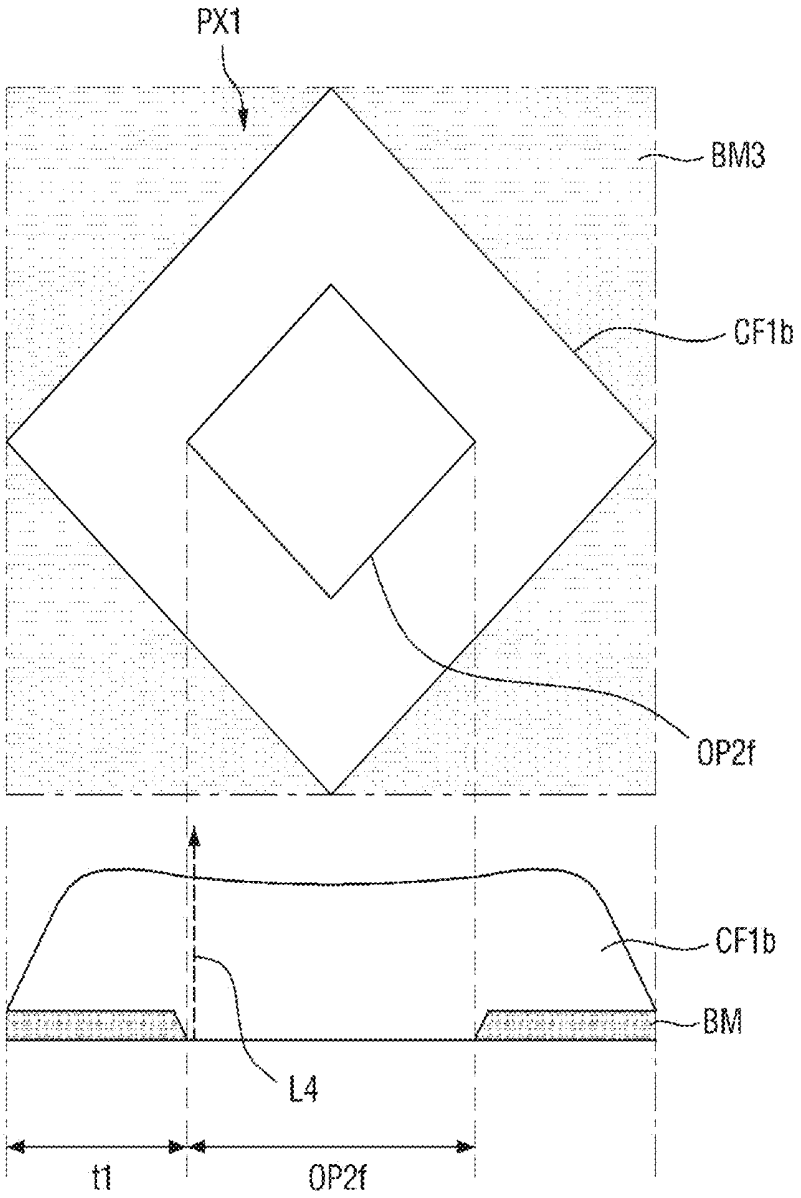

FIG. 15

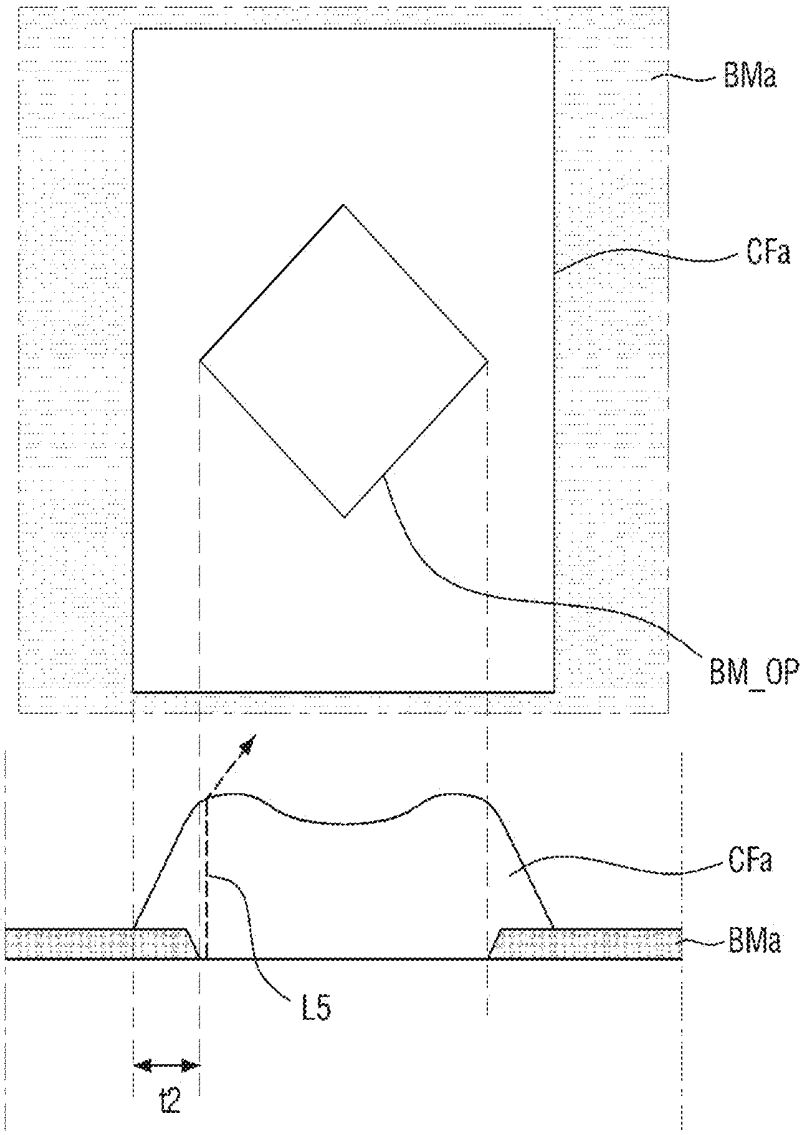

FIG. 16

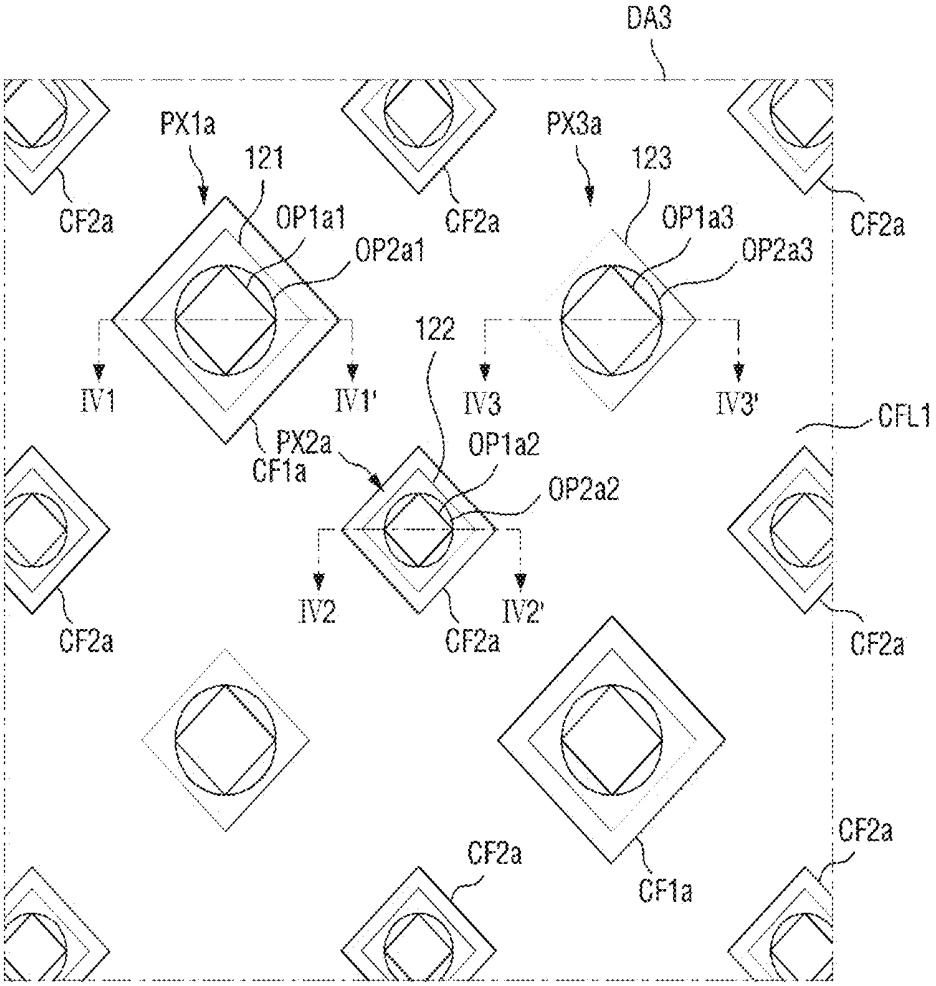
DA3
PX1a
121
OP1a1
OP2a1
CF2a
CF2a
PX3a
123
OP1a3
OP2a3
CF2a
122
IV1
IV1'
IV3
IV3'
CFL1
PX2a
CF1a
OP1a2
OP2a2
IV2
IV2'
CF2a
CF2a
CF2a
CF2a
CF1a
CF2a

FIG. 17

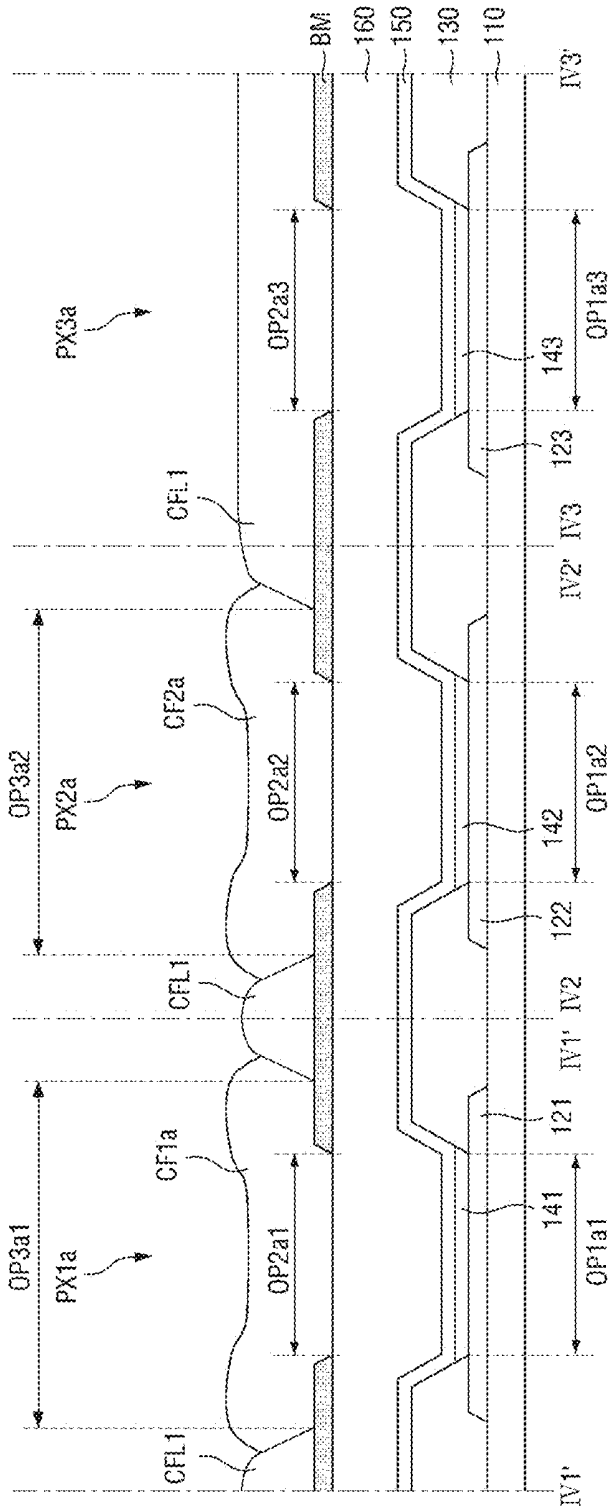
BM
160
150
130
110
IV3'
PX3a
OP2a3
OP1a3
143
123
CFL1
IV3
IV2'
OP3a2
PX2a
CF2a
OP2a2
OP1a2
142
122
CFL1
IV2
IV1'
121
OP3a1
PX1a
CF1a
OP2a1
141
OP1a1
CFL1
IV1'

FIG. 18

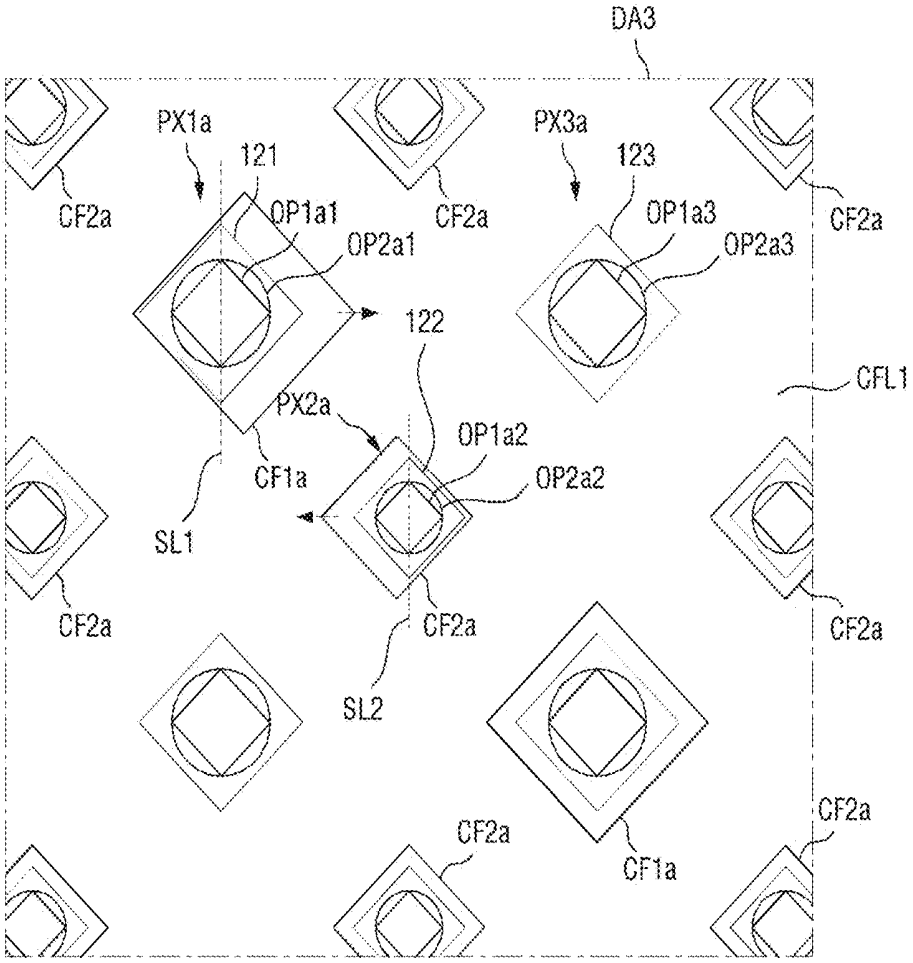
DA3
PX1a
121
OP1a1
OP2a1
CF2a
PX3a
123
OP1a3
OP2a3
CF2a
CF2a
122
CFL1
PX2a
OP1a2
OP2a2
CF1a
SL1
CF2a
CF2a
CF2a
SL2
CF2a
CF2a
CF1a

FIG. 19

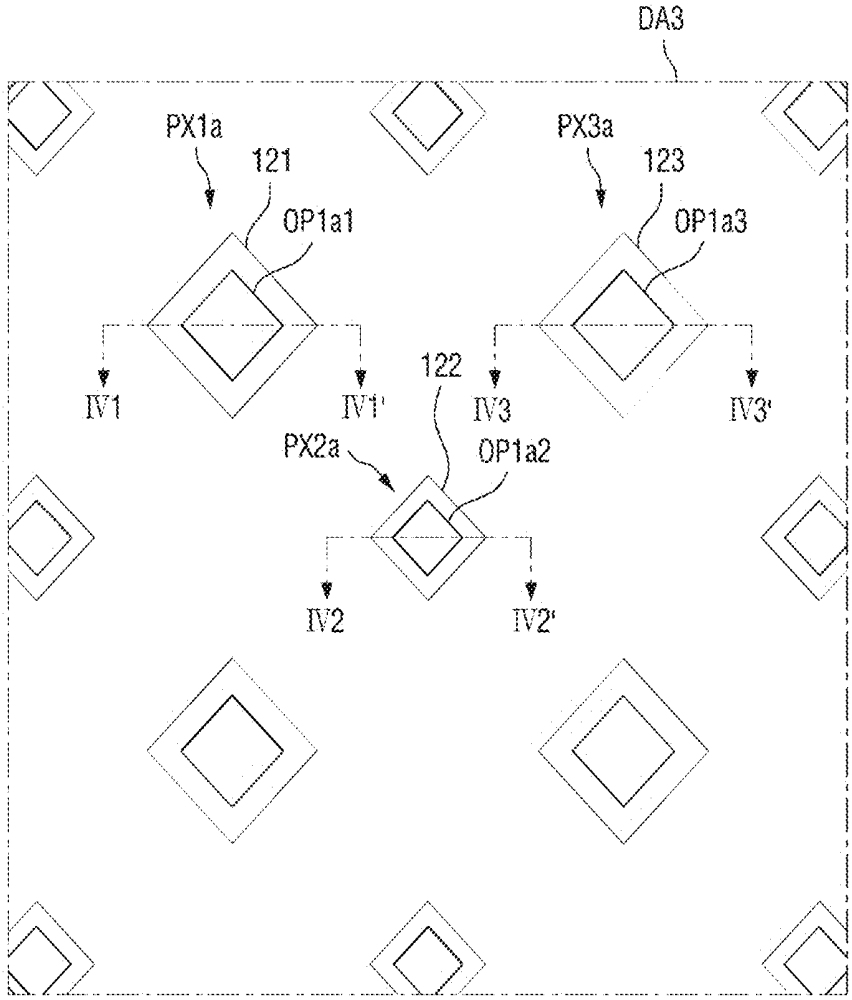
DA3
PX1a
121
OP1a1
PX3a
123
OP1a3
IV1
IV1'
122
IV3
IV3'
PX2a
OP1a2
IV2
IV2'

FIG. 20

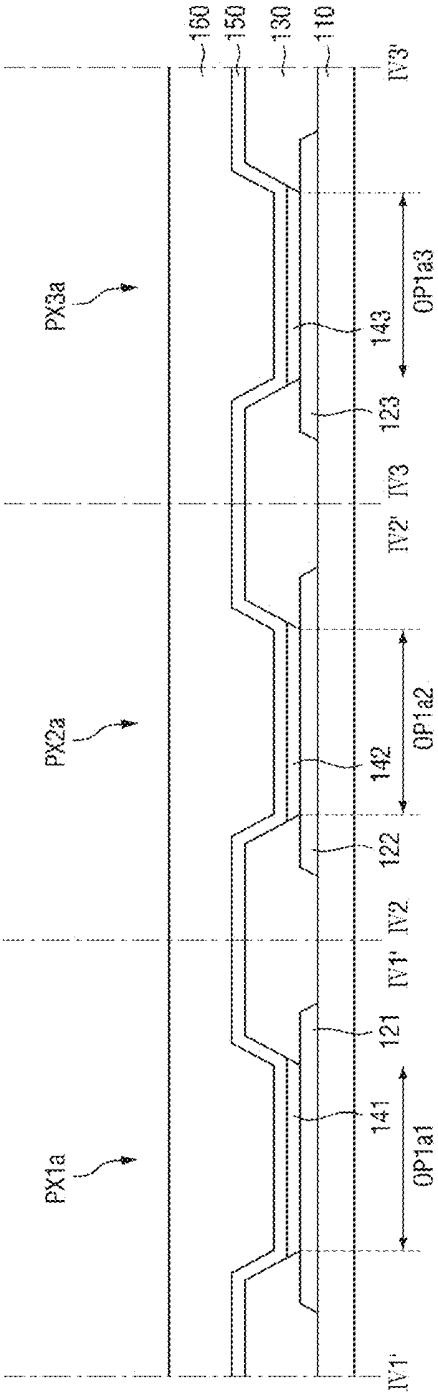
160
150
130
110
IV3'
PX3a
143
OP1a3
123
IV3
IV2'
PX2a
142
OP1a2
122
IV2
IV1'
121
PX1a
141
OP1a1
IV1'

FIG. 21

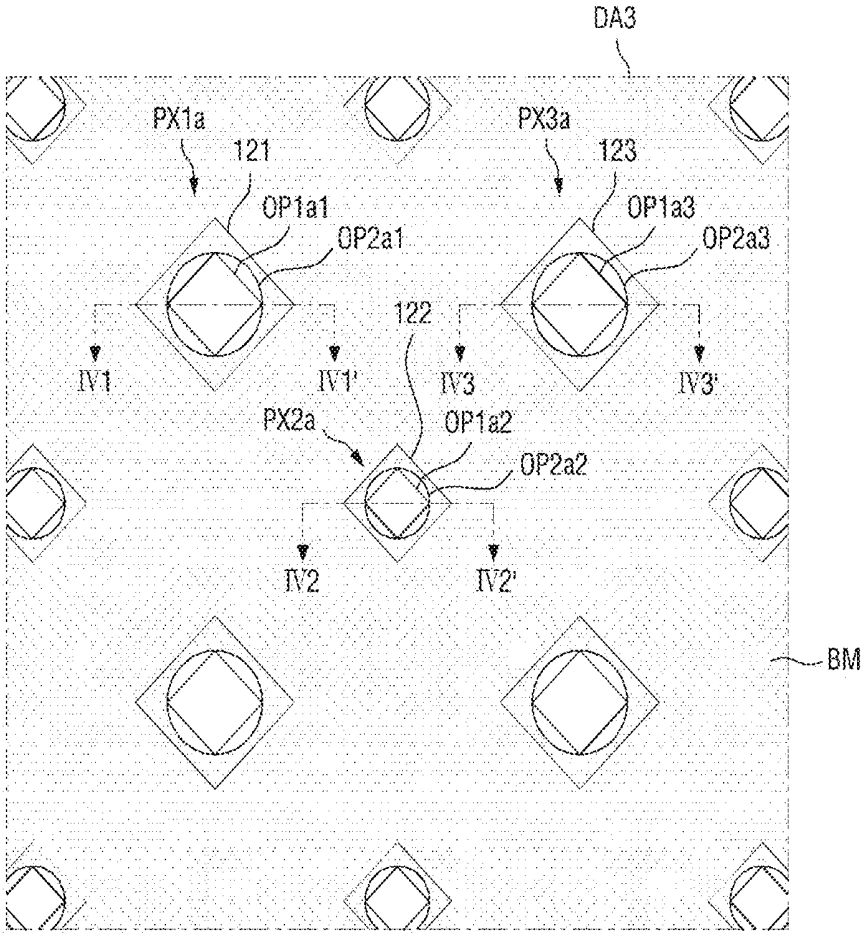
DA3
PX1a
121
OP1a1
OP2a1
PX3a
123
OP1a3
OP2a3
122
IV1
IV1'
IV3
IV3'
PX2a
OP1a2
OP2a2
IV2
IV2'
BM

FIG. 22

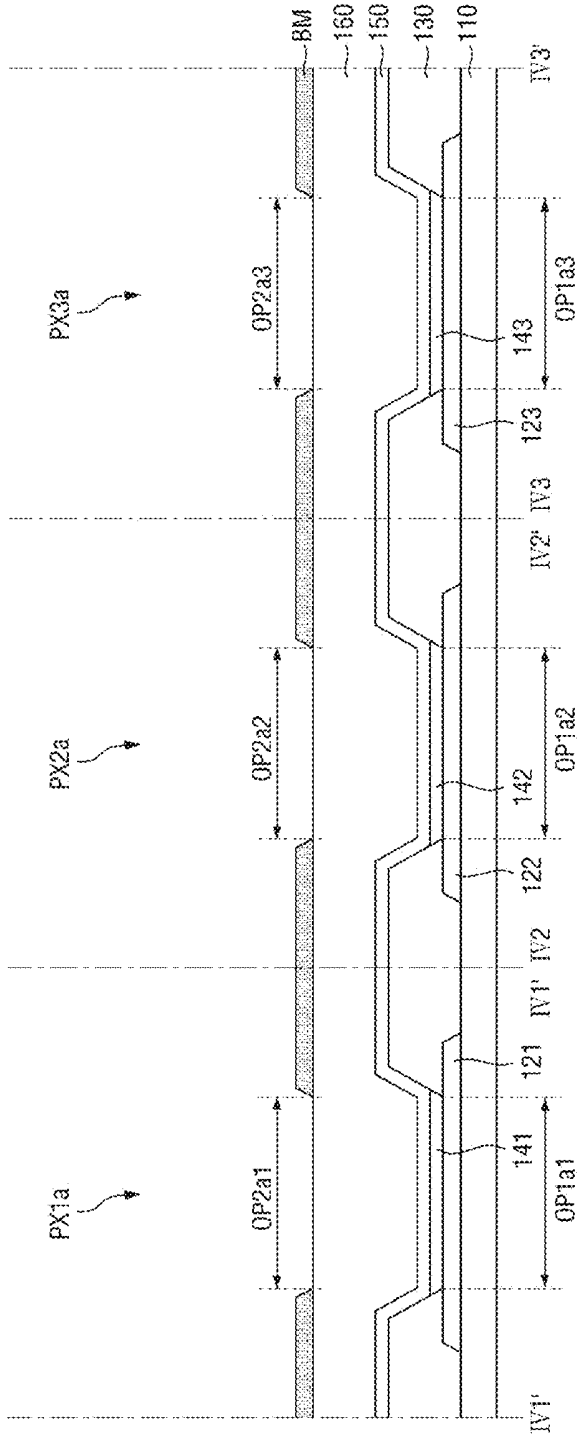
PX1a
PX2a
PX3a
OP2a1
OP2a2
OP2a3
BM
160
150
130
110
141
121
122
142
123
143
OP1a1
OP1a2
OP1a3
IV1'
IV1'
IV2
IV2'
IV3
IV3'

FIG. 23

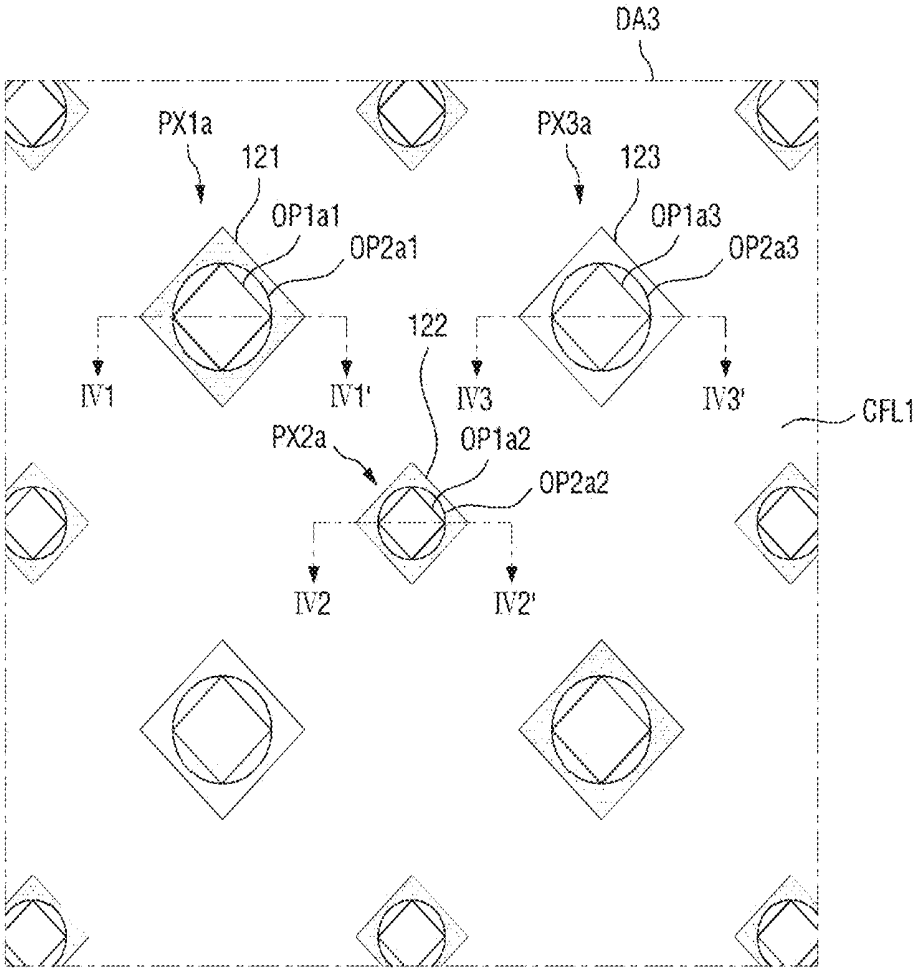
DA3
PX1a
121
OP1a1
OP2a1
PX3a
123
OP1a3
OP2a3
122
IV1
IV1'
IV3
IV3'
CFL1
PX2a
OP1a2
OP2a2
IV2
IV2'

FIG. 24

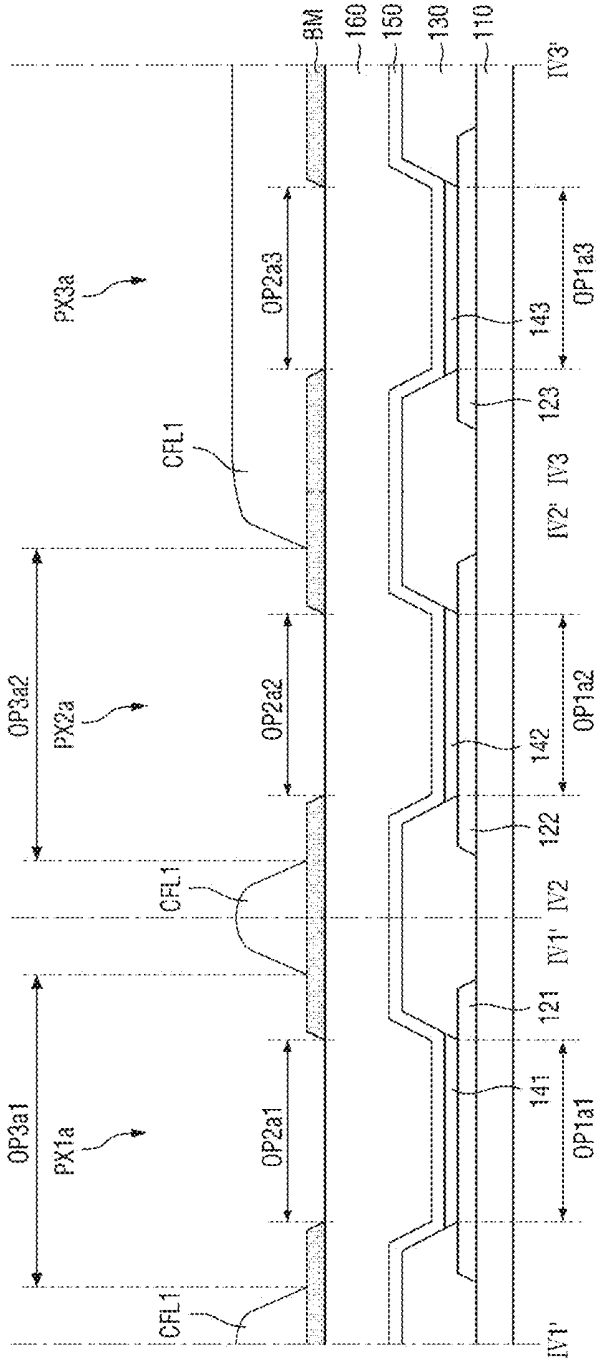
BM
160
150
130
110
IV3'
PX3a
OP2a3
OP1a3
143
123
CFL1
IV3
IV2'
OP3a2
PX2a
OP2a2
OP1a2
142
122
CFL1
IV2
IV1'
121
OP3a1
PX1a
OP2a1
141
OP1a1
CFL1
IV1'

FIG. 25

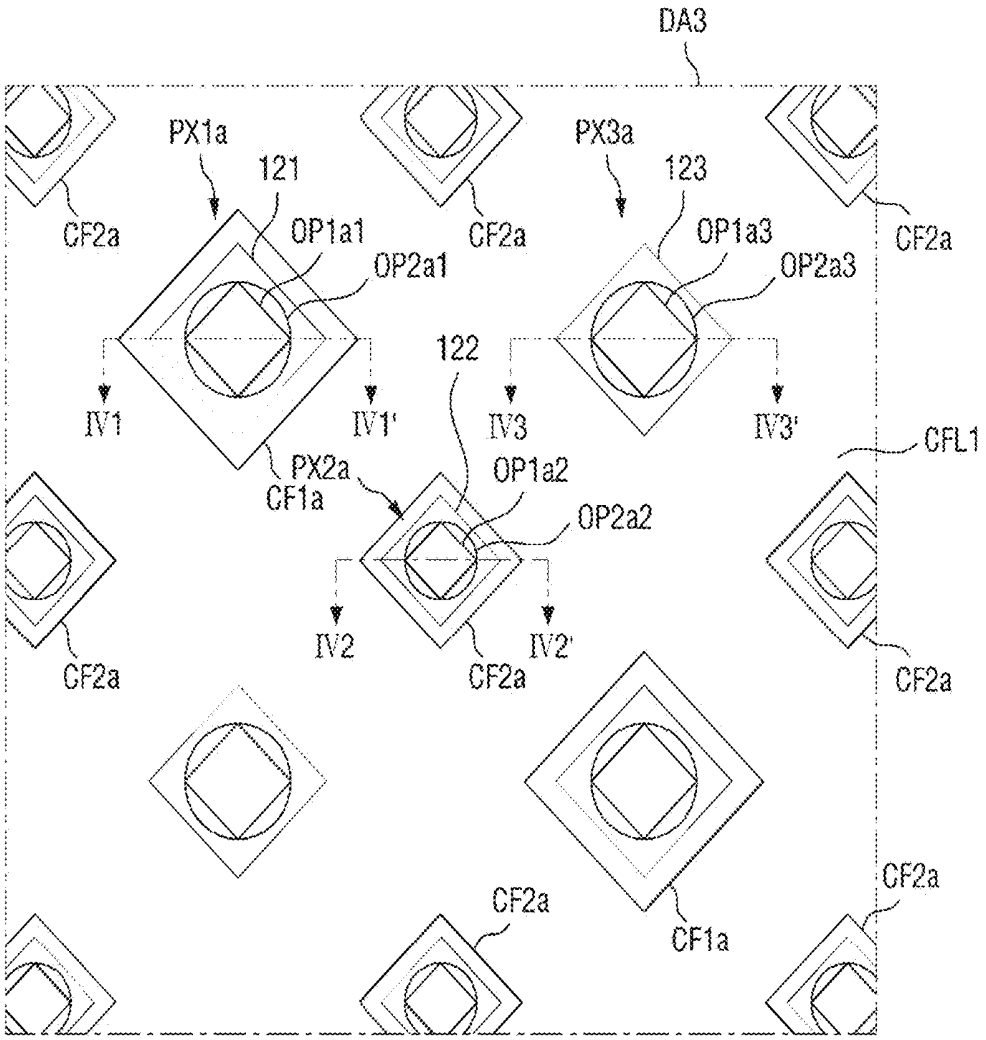
DA3
PX1a
121
OP1a1
OP2a1
CF2a
CF2a
PX3a
123
OP1a3
OP2a3
CF2a
IV1
IV1'
122
IV3
IV3'
CFL1
PX2a
CF1a
OP1a2
OP2a2
IV2
IV2'
CF2a
CF2a
CF2a
CF2a
CF1a
CF2a

FIG. 26

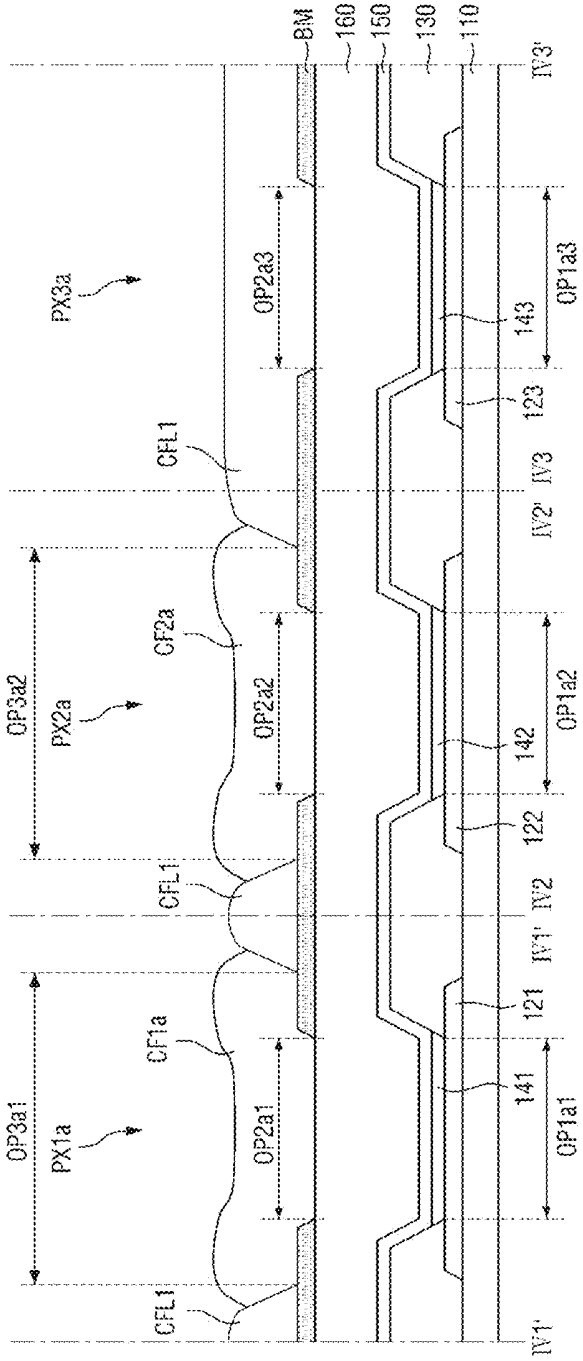
BM
160
150
130
110
IV3'
PX3a
OP2a3
OP1a3
143
123
CFL1
IV3
IV2'
OP3a2
PX2a
CF2a
OP2a2
OP1a2
142
122
CFL1
IV2
IV1'
121
OP3a1
PX1a
CF1a
OP2a1
141
OP1a1
CFL1
IV1'

FIG. 27

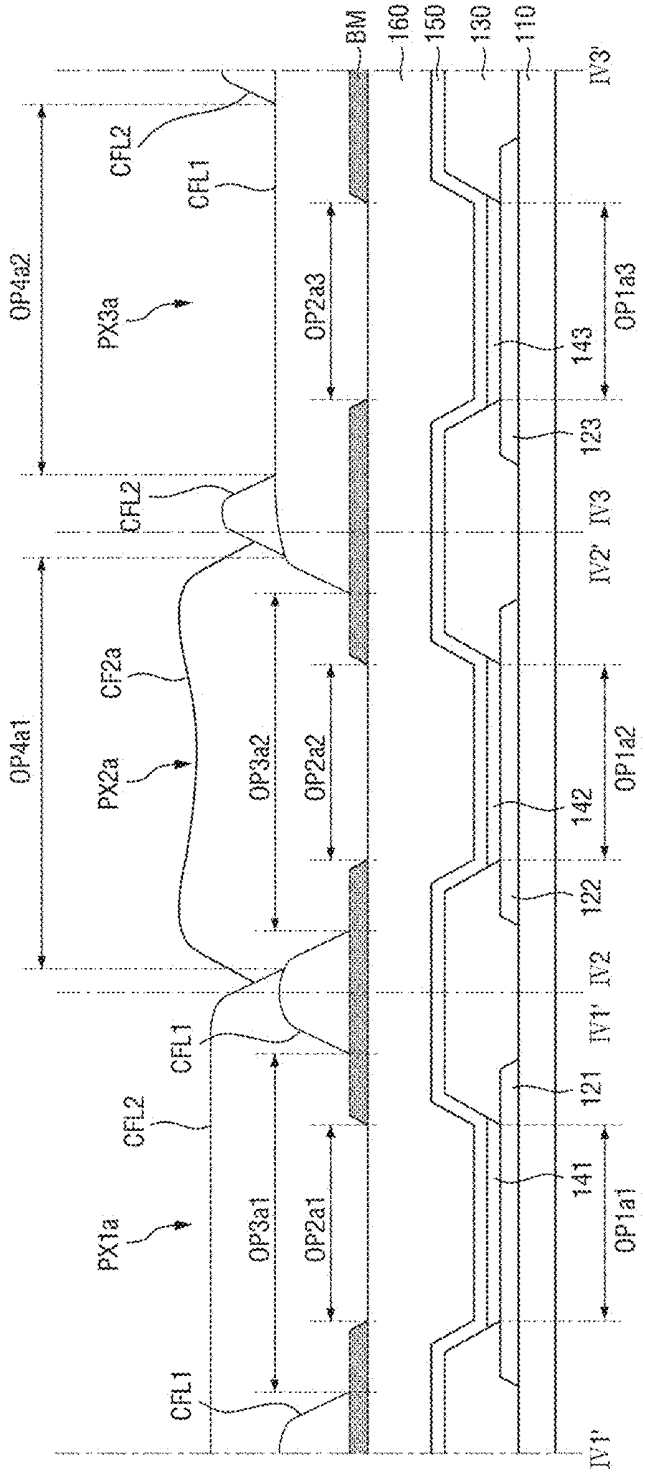
OP4a2
OP4a1
PX3a
PX2a
PX1a
CFL2
CFL1
CF2a
OP3a2
OP3a1
OP2a3
OP2a2
OP2a1
BM
160
150
130
110
143
123
142
122
121
141
OP1a3
OP1a2
OP1a1
IV3'
IV3
IV2'
IV2
IV1'
IV1'

FIG. 28

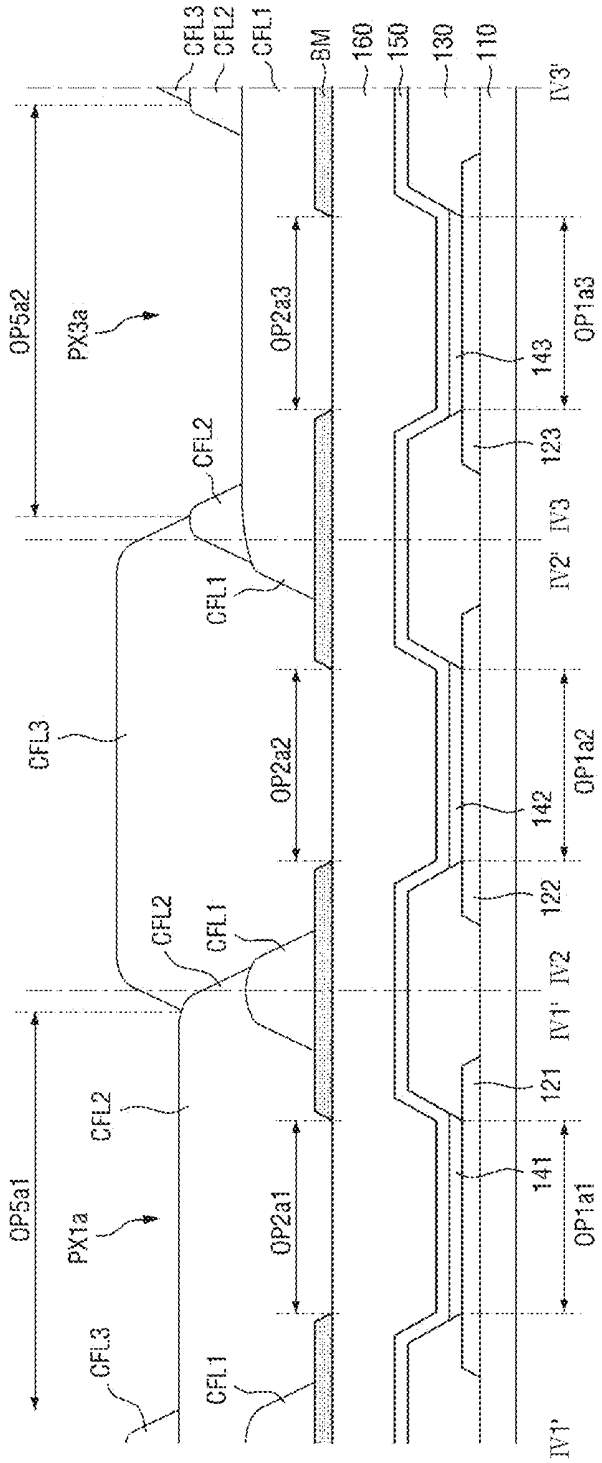
CFL3
CFL2
CFL1
BM
160
150
130
110
IV3'
OP5a2
PX3a
OP2a3
OP1a3
143
123
CFL2
IV3
IV2'
CFL1
CFL3
OP2a2
OP1a2
142
122
CFL2
CFL1
IV2
IV1'
121
CFL2
OP5a1
PX1a
OP2a1
141
OP1a1
CFL3
CFL1
IV1'

FIG. 29

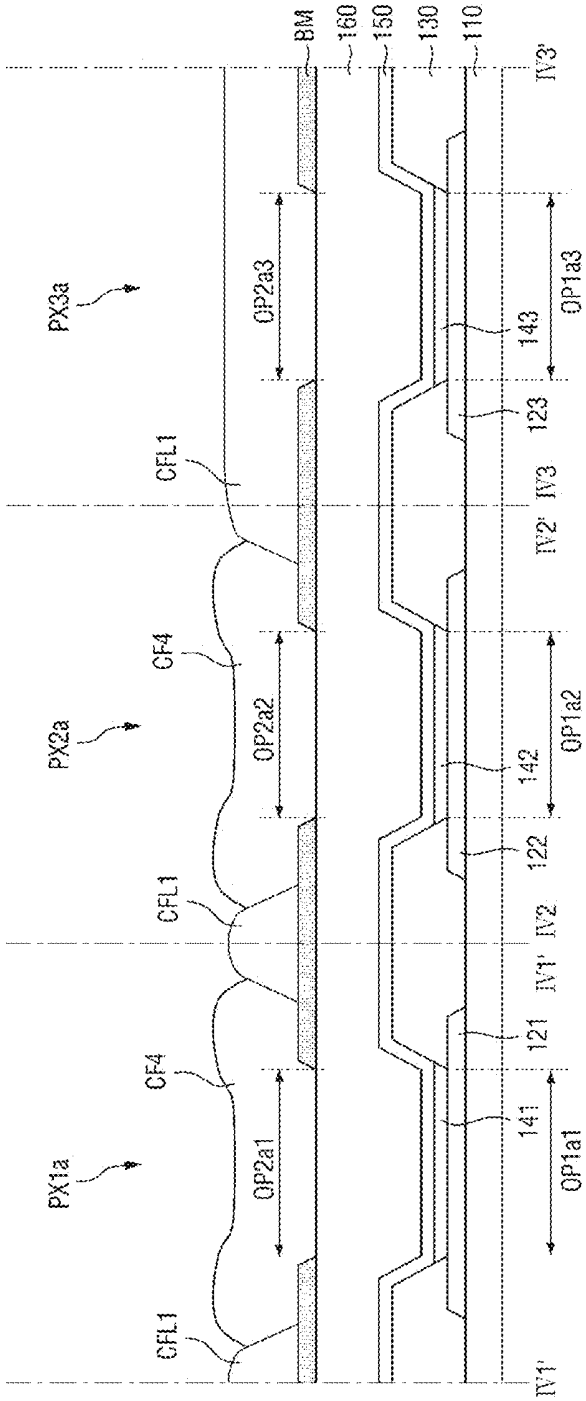
PX1a
PX2a
PX3a
CFL1
CF4
CFL1
CF4
CFL1
OP2a1
OP2a2
OP2a3
BM
160
150
130
110
141
121
142
122
143
123
OP1a1
OP1a2
OP1a3
IV1'
IV1
IV2
IV2'
IV3
IV3'

FIG. 30

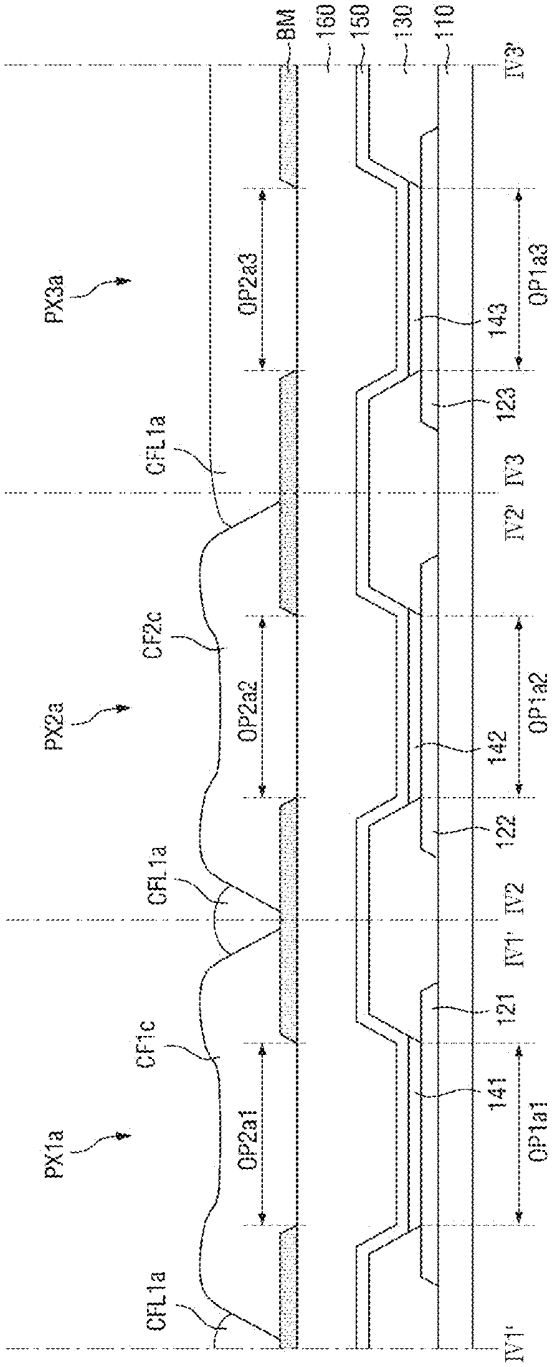
BM
160
150
130
110
IV3'
PX3a
OP2a3
OP1a3
143
123
CFL1a
IV3
IV2'
CF2c
PX2a
OP2a2
OP1a2
142
122
CFL1a
IV2
IV1'
121
CF1c
141
PX1a
OP2a1
OP1a1
CFL1a
IV1'

FIG. 31

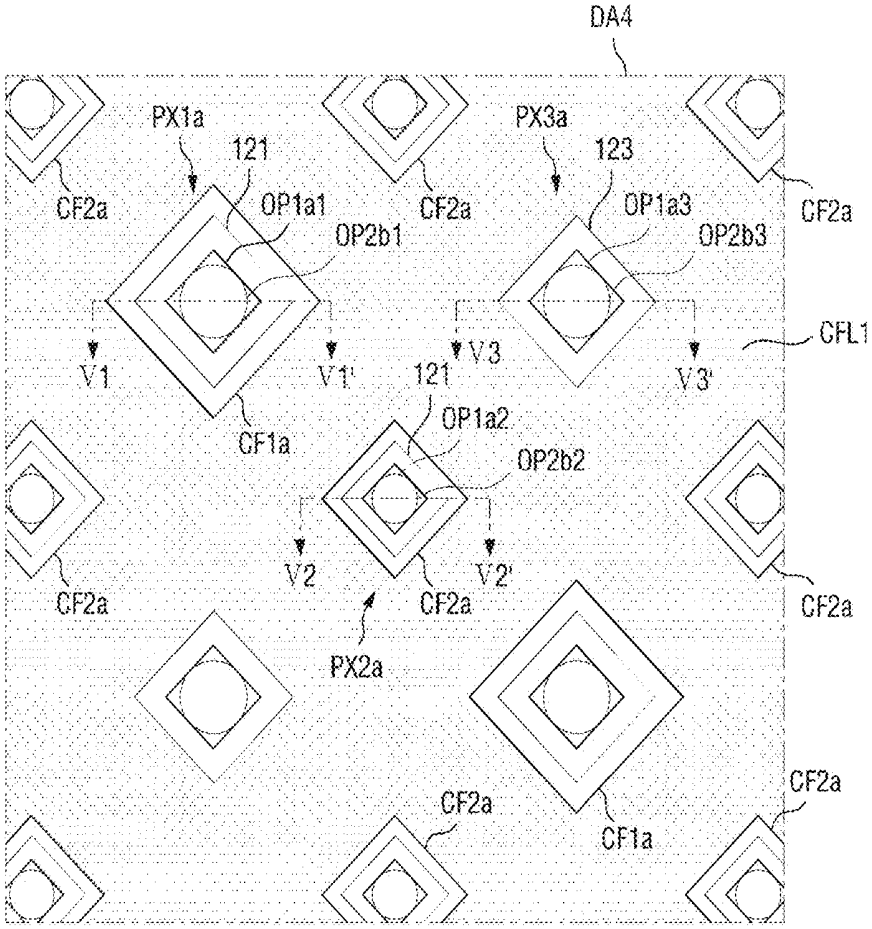
DA4
PX1a
121
PX3a
123
CF2a
OP1a1
OP2b1
OP1a3
OP2b3
CFL1
V1
V1'
V3
V3'
CF1a
OP1a2
OP2b2
V2
V2'
PX2a

FIG. 32

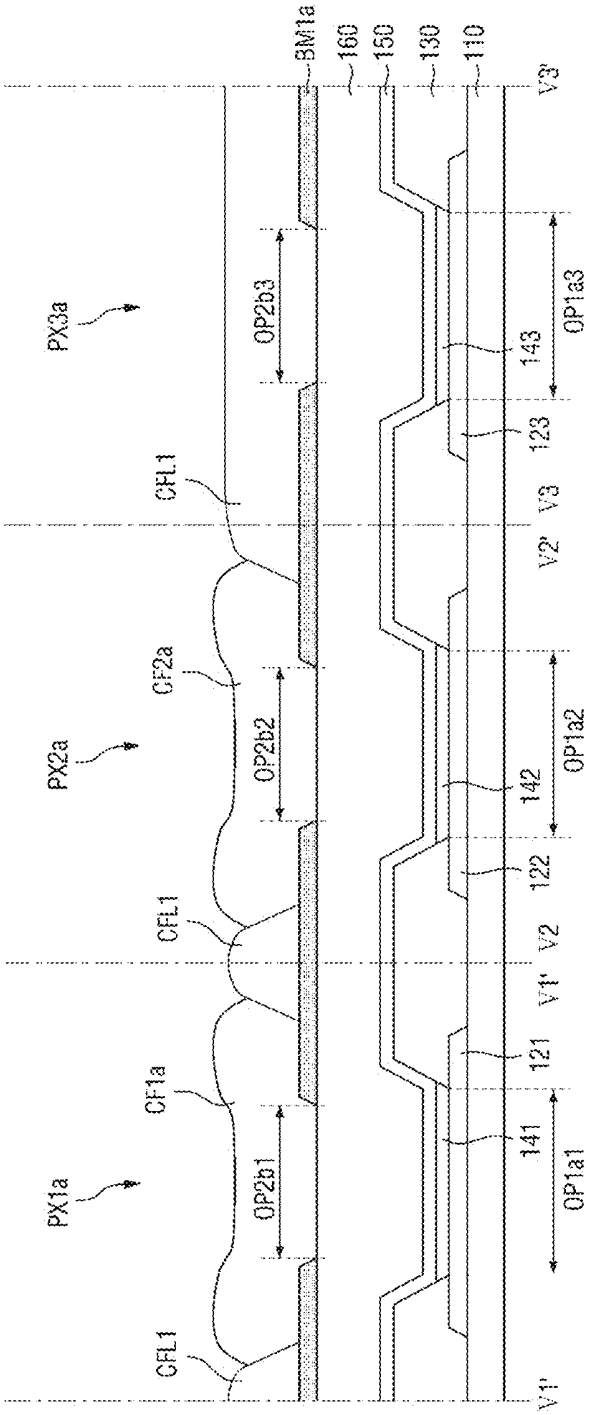
PX1a
PX2a
PX3a
CFL1
CF1a
CFL1
CF2a
CFL1
OP2b1
OP2b2
OP2b3
BM1a
160
150
130
110
V1'
V1'
V2
V2'
V3
V3'
141
121
142
122
143
123
OP1a1
OP1a2
OP1a3

ORGANIC LIGHT EMITTING DISPLAY DEVICE

[0001] This application claims priority to Korean Patent Application No. 10-2017-0085074 filed on Jul. 4, 2017 in the Korean Intellectual Property Office, and all the benefits accruing therefrom under 35 U.S.C. 119, the contents of which in its entirety are herein incorporated by reference.

BACKGROUND

1. Field of the Disclosure

[0002] The present disclosure relates to an organic light emitting display device.

2. Description of the Related Art

[0003] Along with the development of multimedia, display devices are becoming increasingly important. In response to this, several kinds of display devices such as a liquid crystal display (LCD) and an organic light emitting display (OLED) have been used.

[0004] Among the display devices, OLEDs display images by using organic light emitting devices that generate light through recombination of electrons and holes. OLEDs have benefits such as a fast response time, high brightness, a large viewing angle, and low power consumption.

SUMMARY

[0005] Aspects of the present disclosure provide an organic light emitting display device capable of alleviating reflected color separation due to external light.

[0006] Aspects of the present disclosure also provide an organic light emitting display device capable of managing uniform dispersion and reducing reflectivity.

[0007] Aspects of the present disclosure also provide an organic light emitting display device capable of reducing costs because no polarizing plate is used.

[0008] It should be noted that objects of the present inventive concept are not limited to the above-described objects, and other objects of the present inventive concept will be apparent to those skilled in the art from the following descriptions.

[0009] An exemplary embodiment of the present inventive concept discloses a display device comprising: An organic light emitting display device comprising: a substrate; a first pixel electrode disposed on the substrate; a pixel defining film disposed on the first pixel electrode and having a first opening at least partially exposing the first pixel electrode; a first organic light emitting layer disposed on the pixel defining film and overlapping with the first opening of the pixel defining film; and a black matrix disposed on the first organic light emitting layer and having a first opening overlapping with the first organic light emitting layer. Light having passed through the first opening of the black matrix is one of red light, green light, and blue light. The first opening of the black matrix may have a shape with a curved portion.

[0010] An exemplary embodiment of the present inventive concept also discloses a display device comprising: an organic light emitting display device comprising: a substrate; a first pixel electrode disposed on the substrate; a pixel defining film disposed on the first pixel electrode and having a first opening at least partially exposing the first pixel electrode; a first organic light emitting layer disposed on the pixel defining film and overlapping with the first opening of the pixel defining film; and a black matrix disposed on the first organic light emitting layer and having a first opening overlapping with the first organic light emitting layer. The first opening of the back matrix may have a smaller area than the first opening of the pixel defining film.

BRIEF DESCRIPTION OF THE DRAWINGS

[0011] The above and other aspects and features of the present disclosure will become more apparent by describing in detail exemplary embodiments thereof with reference to the attached drawings, in which:

[0012] FIG. **1** is a plan view showing a pixel layout of an organic light emitting display device according to an embodiment of the present inventive concept;

[0013] FIG. **2** is a sectional view taken along line I-I' shown in FIG. **1**;

[0014] FIG. **3** is a view for comparison between FIG. **1**, which is a plan view of a first pixel, and FIG. **2**, which is a sectional view taken along line I-I';

[0015] FIG. **4** is a plan view showing a color filter and an opening of a black matrix of an organic light emitting display device according to a comparative example;

[0016] FIG. **5** is a view showing that color separation is alleviated in an organic light emitting display device according to an embodiment of the present inventive concept;

[0017] FIG. **6** is a view showing color separation in the organic light emitting display device according to the comparative example shown in FIG. **4**;

[0018] FIG. **7** is a plan view showing a pixel layout of an organic light emitting display device according to another embodiment of the present inventive concept;

[0019] FIG. **8** is a sectional view taken along line II-II' shown in FIG. **7**;

[0020] FIGS. **9**A and **9**B is a view showing examples of the shape of an opening of a black matrix shown in FIG. **7**;

[0021] FIG. **10** is a view showing an interval between openings of a pixel defining film adjacent to an organic light emitting display device according to another embodiment of the present inventive concept;

[0022] FIG. **11** is a plan view showing a pixel layout of an organic light emitting display device according to another embodiment of the present inventive concept;

[0023] FIG. **12** is a sectional view taken along line III-III' shown in FIG. **11**;

[0024] FIG. **13** is a plan view showing an opening of a black matrix and a color filter of an organic light emitting display device according to another embodiment of the present inventive concept;

[0025] FIG. **14** is a plan view showing an opening of a black matrix and a color filter of an organic light emitting display device according to still another embodiment of the present inventive concept;

[0026] FIG. **15** is a plan view showing a color filter and an opening of a black matrix of an organic light emitting display device according to a comparative example;

[0027] FIG. **16** is a plan view showing a pixel layout of an organic light emitting display device according to another embodiment of the present inventive concept;

[0028] FIG. **17** is a sectional view taken along line IV**1**-IV**1**', line IV**2**-IV**2**', and line IV**3**-IV**3**' shown in FIG. **16**;

[0029] FIG. **18** is a diagram illustrating an improvement of reflective dispersion of the organic light emitting display device shown in FIG. **16**;

[0030] FIGS. **19**, **20**, **21**, **22**, **23**, **24**, **25** and **26** are diagrams illustrating a process of manufacturing the organic light emitting display device shown in FIG. **16**;

[0031] FIG. **27** is a sectional view showing an organic light emitting display device according to another embodiment of the present inventive concept;

[0032] FIG. **28** is a sectional view showing an organic light emitting display device according to another embodiment of the present inventive concept;

[0033] FIG. **29** is a sectional view showing an organic light emitting display device according to another embodiment of the present inventive concept;

[0034] FIG. **30** is a sectional view showing an organic light emitting display device according to another embodiment of the present inventive concept;

[0035] FIG. **31** is a plan view showing a pixel layout of an organic light emitting display device according to still another embodiment of the present inventive concept; and

[0036] FIG. **32** is a sectional view taken along line V**1**-V**1**', line V**2**-V**2**', and line V**3**-V**3**' shown in FIG. **31**.

DETAILED DESCRIPTION OF THE EMBODIMENTS

[0037] In the following description, for the purposes of explanation, numerous specific details are set forth in order to provide a thorough understanding of various exemplary embodiments. It is apparent, however, that various exemplary embodiments may be practiced without these specific details or with one or more equivalent arrangements. In other instances, well-known structures and devices are shown in block diagram form in order to avoid unnecessarily obscuring various exemplary embodiments.

[0038] In the accompanying figures, the size and relative sizes of layers, films, panels, regions, etc., may be exaggerated for clarity and descriptive purposes. Also, like reference numerals denote like elements.

[0039] When an element or layer is referred to as being "on," "connected to," or "coupled to" another element or layer, it may be directly on, connected to, or coupled to the other element or layer or intervening elements or layers may be present. When, however, an element or layer is referred to as being "directly on," "directly connected to," or "directly coupled to" another element or layer, there are no intervening elements or layers present. For the purposes of this disclosure, "at least one of X, Y, and Z" and "at least one selected from the group consisting of X, Y, and Z" may be construed as X only, Y only, Z only, or any combination of two or more of X, Y, and Z, such as, for instance, XYZ, XYY, YZ, and ZZ. Like numbers refer to like elements throughout. As used herein, the term "and/or" includes any and all combinations of one or more of the associated listed items.

[0040] Although the terms first, second, etc. may be used herein to describe various elements, components, regions, layers, and/or sections, these elements, components, regions, layers, and/or sections should not be limited by these terms. These terms are used to distinguish one element, component, region, layer, and/or section from another element, component, region, layer, and/or section. Thus, a first element, component, region, layer, and/or section discussed below could be termed a second element, component, region, layer, and/or section without departing from the teachings of the present disclosure.

[0041] Spatially relative terms, such as "beneath," "below," "lower," "above," "upper," and the like, may be used herein for descriptive purposes, and, thereby, to describe one element or feature's relationship to another element(s) or feature(s) as illustrated in the drawings. Spatially relative terms are intended to encompass different orientations of an apparatus in use, operation, and/or manufacture in addition to the orientation depicted in the drawings. For example, if the apparatus in the drawings is turned over, elements described as "below" or "beneath" other elements or features would then be oriented "above" the other elements or features. Thus, the exemplary term "below" can encompass both an orientation of above and below. Furthermore, the apparatus may be otherwise oriented (e.g., rotated 90 degrees or at other orientations), and, as such, the spatially relative descriptors used herein interpreted accordingly.

[0042] The terminology used herein is for the purpose of describing particular embodiments and is not intended to be limiting. As used herein, the singular forms, and "the" are intended to include the plural forms as well, unless the context clearly indicates otherwise. Moreover, the terms "comprises," "comprising," "includes," and/or "including," when used in this specification, specify the presence of stated features, integers, steps, operations, elements, components, and/or groups thereof, but do not preclude the presence or addition of one or more other features, integers, steps, operations, elements, components, and/or groups thereof.

[0043] Various exemplary embodiments are described herein with reference to sectional illustrations that are schematic illustrations of idealized exemplary embodiments and/or intermediate structures. As such, variations from the shapes of the illustrations as a result, for example, of manufacturing techniques and/or tolerances, are to be expected. Thus, exemplary embodiments disclosed herein should not be construed as limited to the particular illustrated shapes of regions, but are to include deviations in shapes that result from, for instance, manufacturing. For example, an implanted region illustrated as a rectangle will, typically, have rounded or curved features and/or a gradient of implant concentration at its edges rather than a binary change from implanted to non-implanted region. Likewise, a buried region formed by implantation may result in some implantation in the region between the buried region and the surface through which the implantation takes place. Thus, the regions illustrated in the drawings are schematic in nature and their shapes are not intended to illustrate the actual shape of a region of a device and are not intended to be limiting.

[0044] Unless otherwise defined, all terms (including technical and scientific terms) used herein have the same meaning as commonly understood by one of ordinary skill in the art to which this disclosure is a part. Terms, such as those defined in commonly used dictionaries, should be interpreted as having a meaning that is consistent with their meaning in the context of the relevant art and will not be interpreted in an idealized or overly formal sense, unless expressly so defined herein.

[0045] Hereinafter, exemplary embodiments will be described with reference to the accompanying drawings.

[0046] FIG. **1** is a plan view showing a pixel layout of an organic light emitting display device according to an embodiment of the present inventive concept.

[0047] Referring to FIG. **1**, a plurality of pixel units including first to fourth pixels PX**1** to PX**4** may be disposed in a pixel area DA.

[0048] An arrangement of the first to fourth pixels PX**1** to PX**4** will be described with reference to FIG. **1**. The first pixel PX**1** and the third pixel PX**3** may be disposed adjacent to each other in a first direction d**1**. The second pixel PX**2** and the fourth pixel PX**4** may be disposed adjacent to each other in the first direction d**1**. The first pixel PX**1** and the second pixel PX**2** may be disposed adjacent to each other in a second direction d**2**, which is a diagonal direction with respect to the first direction d**1** and a third direction d**3** which is perpendicular to the first direction d**1**. The third pixel PX**3** and the fourth pixel PX**4** may be disposed adjacent to each other in the second direction d**2**.

[0049] A plurality of color filters may include first, second, and third color filters CF**1**, CF**2**, and CF**3**. In this disclosure, the first color filter CF**1** may be a red color filter, the second color filter CF**2** may be a green color filter, and the third color filter CF**3** may be a blue color filter. However, the first color filter CF**1**, the second color filter CF**2**, and the third color filter CF**3** are not limited to red, green, and blue color filters, respectively. For example, each of the first color filter CF**1**, the second color filter CF**2**, and the third color filter CF**3** may be any one of a cyan color filter, a magenta color filter, and a yellow color filter. Here, as an example, it will be described that the first color filter CF**1** is a red color filter, the second color filter CF**2** is a green color filter, and the third color filter CF**3** is a blue color filter. In this disclosure, the same reference numeral will be used to describe color filters which transmit light in the same wavelength region.

[0050] The first pixel PX**1** may overlap with the first color filter CF**1**. The second pixel PX**2** and the fourth pixel PX**4** may overlap with the second color filter CF**2**. Also, the third pixel PX**3** may overlap with the third color filter CF**3**. Thus, the first pixel PX**1** may display a red color, and the second pixel PX**2** and the fourth pixel PX**4** may display a green color. Also, the third pixel PX**3** may display a blue color.

[0051] Here, the first to fourth pixels PX**1** to PX**4**, which display red, green, blue, and green colors, may constitute a single pixel unit. That is, as a red-green-blue-green (RGBG) pentile, the first to fourth pixels PX**1** to PX**4** may be disposed in the pixel area DA. However, the arrangement of the plurality of pixels disposed in the pixel area DA is not limited to that shown in FIG. **1**. For example, the arrangement of the plurality of pixels may vary depending on the display colors of the pixels, the resolution and the aperture ratio of an applied organic light emitting display device, and so on.

[0052] In this disclosure, the expression "a first element and a second element overlap with each other" indicates that the first element overlaps with the second element when projected onto a first substrate **110**.

[0053] Here, relations between a first pixel electrode **121**, an opening OP**1***a* of a pixel defining film **130** (see FIG. **2**), and an opening OP**2***a* of a black matrix BM will be described on the basis of the first pixel PX**1**.

[0054] The first pixel PX**1** may include the first pixel electrode **121**. The first pixel electrode **121** may be partially exposed by the opening OP**1***a* of the pixel defining film **130** (see FIG. **2**). The first pixel electrode **121** may overlap with the opening OP**1***a* of the pixel defining film **130** (see FIG. **2**) and the opening OP**2***a* of the black matrix BM.

[0055] The first pixel electrode **121** may overlap with the first color filter CF**1**. More specifically, the first color filter CF**1** may overlap with the first pixel electrode **121** by covering the opening OP**2***a* of the black matrix BM. Thus, the first pixel PX**1** may display a red color because light emitted from a first organic light emitting layer **141** (see FIG. **2**) becomes red after passing through the first color filter CF**1**.

[0056] As an example, the first pixel electrode **121** may have a rhombus shape. Also, as an example, the opening OP**1***a* of the pixel defining film **130** (see FIG. **2**) may have a rhombus shape. Here, the rhombus shape may include the shape of a figure that is substantially the same as a rhombus (e.g., a quadrangle) in consideration of a manufacturing process or the like, as well as the shape of a rhombus. The shape of the first pixel electrode **121** and the shape of the opening OP**1***a* of the pixel defining film **130** (see FIG. **2**) are not limited to those shown in FIG. **1**. That is, the shape of the first pixel electrode **121** and the shape of the opening OP**1***a* of the pixel defining film **130** (see FIG. **2**) may vary depending on the arrangement of the plurality of pixels.

[0057] The shape of the opening OP**2***a* of the black matrix BM may have a curved portion. In this disclosure, the term "curved portion" is defined as a region having a predetermined curvature. Thus, the shape of the opening OP**2***a* of the black matrix BM may include a region having a predetermined curvature, i.e., a curved portion.

[0058] More specifically, the opening OP**2***a* of the black matrix BM may have a substantially circular shape. That is, the planar shape of the opening OP**2***a* of the black matrix BM may be a curved line which is composed of assemblies of dots that are spaced a certain distance apart from a virtual center point cp. The opening OP**2***a* of the black matrix BM may omnidirectionally and uniformly induce diffraction of light on the basis of the virtual center point cp. This will be described in detail below with reference to FIGS. **3** to **6**. In this disclosure, the circular shape may include the shape of a polygon substantially close to a circle, an ellipse, or a figure having at least one curved portion in consideration of a manufacturing process or the like, as well as the shape of a circle. Here, in this disclosure, a polygon close to a circle, an ellipse, or a figure with at least one curved portion is described as a "circular shape."

[0059] FIG. **2**. is a sectional view taken along line I-I' shown in FIG. **1**. The following description will be provided with reference to the first pixel PX**1**, as described above.

[0060] Referring to FIGS. **1** and **2**, the organic light emitting display device according to an embodiment of the present inventive concept may include the first substrate **110**, the first pixel electrode **121**, the pixel defining film **130**, the first organic light emitting layer **141**, a common electrode **150**, an encapsulation layer **160**, the black matrix BM, the first color filter CF**1**, the second color filter CF**2**, and the third color filter CF**3**.

[0061] The first substrate **110** may be an insulating substrate. As an example, the first substrate **110** may include materials such as glass, quartz, and polymer resins. Here, the polymer materials may include polyethersulphone (PES), polyacrylate (PA), polyarylate (PAR), polyetherimide (PEI), polyethylenenaphthalate (PEN), polyethyleneterephthalate (PET), polyphenylenesulfide (PPS), polyallylate, polyimide (PI), polycarbonate (PC), cellulosetriacetate (CAT), cellu-

lose acetate propionate (CAP), or a combination thereof. As another example, the first substrate **110** may be a flexible substrate including polyimide (PI).

[0062] The first pixel electrode **121** may be disposed on the first substrate **110**. Although not shown, other elements may be additionally disposed between the first substrate **110** and the first pixel electrode **121**. As an example, the other elements may include a buffer layer, a conductive wire, an insulation layer, and a plurality of thin-film transistors. Here, the plurality of thin-film transistors may use amorphous silicon, polysilicon, low temperature polysilicon (LTPS), an oxide semiconductor, an organic semiconductor, or the like as a channel layer. The plurality of thin-film transistors may have different types of channel layers. As an example, both of a thin-film transistor including an oxide semiconductor and a thin-film transistor including LTPS may be included in one pixel, in consideration of roles or manufacturing processes of the thin-film transistors.

[0063] As an example, the first pixel electrode **121** may be an anode electrode. When the first pixel electrode **121** is an anode electrode, the first pixel electrode **121** may include a high work function material to facilitate hole injection. Also, the first pixel electrode **121** may be a reflective electrode, a semitransparent electrode, or a transparent electrode. As an example, the first pixel electrode **121** may include a reflective material. The reflective material may include, as an example, one or more selected from the group consisting of silver (Ag), magnesium (Mg), chromium (Cr), gold (Au), platinum (Pt), nickel (Ni), copper (Cu), tungsten (W), aluminum (Al), aluminum-lithium (Al—Li), magnesium-indium (Mg—In), and magnesium-silver (Mg—Ag).

[0064] As an example, the first pixel electrode **121** may be formed as a single-layered film, but is not limited thereto. That is, the first pixel electrode **121** may be formed as a multi-layered film in which two or more materials are stacked.

[0065] When the first pixel electrode **121** is formed as a multi-layered film, the first pixel electrode **121** may include, as an example, a reflective film and a transparent or semitransparent electrode disposed above the reflective film. As another example, the first pixel electrode **121** may include a reflective film and a transparent or semitransparent electrode disposed below the reflective film. For example, the first pixel electrode **121** may have a three-layered structure of ITO/Ag/ITO, but is not limited thereto.

[0066] Here, the transparent or semitransparent electrode may include one or more selected from the group consisting of indium tin oxide (ITO), indium zinc oxide (IZO), zinc oxide (ZnO), indium oxide (In_2O_3), indium gallium oxide (IGO), and aluminum zinc oxide (AZO).

[0067] The pixel defining film **130** may be disposed on the first pixel electrode **121**. The pixel defining film **130** includes the opening OP**1***a* that at least partially exposes the first pixel electrode **121**. The pixel defining film **130** may include an organic material or an inorganic material. As an example, the pixel defining film **130** may include materials such as a photoresist, a polyimide resin, an acrylic resin, a silicon compound, and a polyacrylic resin.

[0068] The first organic light emitting layer **141** may be disposed on the first pixel electrode **121**. More specifically, the first organic light emitting layer **141** may be disposed on a region of the first pixel electrode **121** to cover the opening OP**1***a* of the pixel defining film **130**. As an example, the first organic light emitting layer **141** may at least partially cover a side wall of the pixel defining film **130**.

[0069] As an example, the first organic light emitting layer **141** may emit red light. That is, the first organic light emitting layer **141** may include a red light emitting material. As another example, the first organic light emitting layer **141** may emit white light. That is, the first organic light emitting layer **141** may include a white light emitting material. Unlike this, the first organic light emitting layer **141** may have a form in which a red light emitting layer, a green light emitting layer, and a blue light emitting layer are stacked to emit white light. In this disclosure, an example in which the first organic light emitting layer **141** emits red light and the other organic light emitting layers emit any one of red light, green light, and blue light will be described below.

[0070] Although not shown, the first organic light emitting layer **141** may have a multi-layered structure including a hole injection layer HIL, a hole transport layer HTL, an electron transport layer ETL, an electron injection layer EIL, and so on.

[0071] The common electrode **150** may be disposed on the first organic light emitting layer **141** and the pixel defining film **130**. As an example, the common electrode **150** may be formed over the first organic light emitting layer **141** and the pixel defining film **130**. As an example, the common electrode **150** may be a cathode electrode. The common electrode **150** may include one or more selected from the group consisting of Li, Ca, LiF/Ca, LiF/Al, Al, Ag, and Mg. Also, the common electrode **150** may be formed of a low work function material. As an example, the common electrode **150** may be a transparent or semitransparent electrode including any one or more selected from the group consisting of indium tin oxide (ITO), indium zinc oxide (IZO), zinc oxide (ZnO), indium oxide (In_2O_3), iridium gallium oxide (IGO), and aluminum zinc oxide (AZO).

[0072] The encapsulation layer **160** may be disposed on the first substrate **110** to cover the first organic light emitting layer **141**. That is, a plurality of organic light emitting devices including the first organic light emitting layer **141** may be disposed between the first substrate **110** and the encapsulation layer **160**. The encapsulation layer **160** may block penetration of external oxygen and moisture into the plurality of organic light emitting devices which include the first organic light emitting layer **141**.

[0073] As an example, the encapsulation layer **160** may have a form in which at least one of an organic layer and an inorganic layer is stacked in a single-layered structure or a multi-layered structure. The organic layer may include any one selected from the group consisting of epoxy, acrylate, and urethane acrylate. The inorganic layer may include any one or more selected from the group consisting of silicon oxide (SiOx), silicon nitride (SiNx), and silicon oxynitride (SiONx). As an example, the encapsulation layer **160** may have a form in which a first inorganic layer, an organic layer disposed on the first inorganic layer, and a second inorganic layer disposed on the organic layer are stacked.

[0074] As another example, the encapsulation layer **160** may be a transparent insulating substrate. When the encapsulation layer **160** is a transparent insulating substrate, the transparent insulating substrate may be a glass substrate, a quartz substrate, a transparent resin substrate, etc. Also, an adhesion layer may be disposed between the transparent

insulating substrate and the first substrate **110** in order to bond the transparent insulating substrate and the first substrate **110**.

[0075] Meanwhile, the encapsulation layer **160** may be omitted when the color filter and the black matrix BM additionally serve as an encapsulation layer.

[0076] Although not shown, a capping layer may be additionally included between the common electrode **150** and the encapsulation layer **160**. The capping layer can prevent light incident on the common electrode **150** from being lost by total reflection. As an example, the capping layer may be formed as an organic film or an inorganic film.

[0077] The black matrix BM may be disposed on the encapsulation layer **160**. The black matrix BM may be disposed on the encapsulation layer **160** to cover an entire surface of the encapsulation layer **160** except regions of opening OP**2***a*. A material with high absorption for visible light may be used for the black matrix BM. As an example, the black matrix BM may include a metal such as chromium (Cr), a metal nitride, a metal oxide, a resin material colored in black, or the like.

[0078] The opening OP**2***a* of the black matrix BM may overlap with the first organic light emitting layer **141** and the opening OP**1***a* of the pixel defining film **130**. Thus, light emitted from the first organic light emitting layer **141** may pass through the opening OP**1***a* of the pixel defining film **130** and the opening OP**2***a* of the black matrix BM. Although not shown, a buffer layer or an organic layer may be formed between the black matrix BM and the encapsulation layer **160**. The buffer layer or the organic layer may be formed in a single-layered structure or a multi-layered structure. The opening OP**2***a* of the black matrix BM may completely expose the opening OP**1***a* of the pixel defining film **130** in a plan view.

[0079] The first color filter CF**1**, the second color filter CF**2**, and the third color filter CF**3** may be disposed on the black matrix BM. The black matrix BM may be disposed at a boundary between the plurality of color filters including the first color filter CF**1**, the second color filter CF**2**, and the third color filter CF**3**.

[0080] The first color filter CF**1** may selectively transmit red light. Here, the red light may have a wavelength ranging from about 620 nm to about 750 nm. The second color filter CF**2** may selectively transmit green light. Here, the green light may have a wavelength ranging from about 495 nm to about 570 nm. The third color filter CF**3** may selectively transmit blue light. Here, the blue light may have a wavelength ranging from about 450 nm to about 495 nm. As an example, the first color filter CF**1**, the second color filter CF**2**, and the third color filter CF**3** may include a resin containing pigment or dye. As another example, the first color filter CF**1**, the second color filter CF**2**, and the third color filter CF**3** may include different materials which are formed through different processes.

[0081] As an example, the first color filter CF**1**, the second color filter CF**2**, and the third color filter CF**3** may have a rhombus shape. Thus, it is possible to minimize separation distances between the first color filter CF**1** and its adjacent color filters. Meanwhile, in FIG. **1**, the adjacent color filters are shown as not overlapping with each other, but the adjacent color filters may overlap with each other. When the adjacent color filters overlap with each other, an overlapped portion may overlap with the black matrix BM. Also, the shape and size of the first color filter CF**1**, the second color filter CF**2**, and the third color filter CF**3** are not limited to those shown in FIGS. **1** and **2**. Meanwhile, in this disclosure, an example in which a color filter is disposed on the black matrix BM has been described. Unlike this, the black matrix BM may be disposed on the color filter.

[0082] FIG. **3** is a view for comparison between FIG. **1**, which is a plan view of a first pixel, and FIG. **2**, which is a sectional view taken along line I-I'. FIG. **4** is a plan view showing a color filter and an opening of a black matrix of an organic light emitting display device according to a comparative example. For convenience of description, some elements included in the organic light emitting display device may be omitted in FIGS. **3** and **4**.

[0083] Referring to FIG. **3**, the opening OP**2***a* of the black matrix BM may have a circular shape. That is, the opening OP**2***a* of the black matrix BM has a circular shape and thus can omnidirectionally and uniformly induce diffraction of light L**1** on the basis of the virtual center point cp. Thus, even when light introduced from an external source (hereinafter referred to as "external light") is reflected by the first pixel electrode **121**, the organic light emitting display device according to an embodiment of the present inventive concept may omnidirectionally and uniformly induce diffraction of the reflected light L**1**. Accordingly, with the organic light emitting display device according to an embodiment of the present inventive concept, it is possible to alleviate color separation due to external light and visibility degradation due to external light reflection.

[0084] Referring to FIG. **4**, an organic light emitting display device according to a comparative example includes a black matrix BMa having a rhombic opening BM_OP and a quadrangular color filter CFa. That is, the opening BM_OP of the black matrix BMa does not have uniform diffraction of light L**2** on the basis of a virtual center point cpa. More specifically, the organic light emitting display device according to the comparative example has different diffraction of light L**2** at a vertex a**1** and a side a**2** of the rhombic opening BM_OP of the black matrix. Thus, even when the external light is reflected, the organic light emitting display device according to the comparative example does not have uniform diffraction of light L**2** (i.e., light L**2** is biased in a certain direction), and thus color separation may be generated.

[0085] FIG. **5** is a view showing that color separation is alleviated in an organic light emitting display device according to an embodiment of the present inventive concept. FIG. **6** is a view showing color separation of the organic light emitting display device according to the comparative example shown in FIG. **4**.

[0086] It can be seen from FIG. **6** that color separation is generated in the form of a letter X in the organic light emitting display device according to the comparative example. On the other hand, it can be seen from FIG. **5** that color separation due to external light is alleviated by the organic light emitting display device according to an embodiment of the present inventive concept by omnidirectionally and uniformly inducing diffraction of light.

[0087] Meanwhile, the organic light emitting display device according to an embodiment of the present inventive concept does not include a polarizing plate. That is, the organic light emitting display device according to an embodiment of the present inventive concept can reduce reflection of external light without using the polarizing plate by using the color filter and the black matrix BM as

disclosed in the embodiment. Also, it is possible to alleviate color separation by forming the opening BM_OP of the black matrix BMa in a circular shape.

[0088] FIG. **7** is a plan view showing a pixel layout of an organic light emitting display device according to another embodiment of the present inventive concept. FIG. **8** is a sectional view taken along line II-II' shown in FIG. **7**. For convenience of description, contents which are described in the foregoing embodiments with reference to FIGS. **1** to **6** will be omitted in the following description. The same reference numerals will be used for the same elements as those shown in FIGS. **1** to **6**.

[0089] Referring to FIGS. **7** and **8**, an opening OP**2***b* of a black matrix BM**1** has a smaller area than the opening OP**1***a* of the pixel defining film **130**. That is, the opening OP**2***b* of the black matrix BM**1** may fully overlap with a region of the first pixel electrode **121** exposed by the opening OP**1***a* of the pixel defining film **130**.

[0090] Accordingly, since the opening OP**2***b* of the black matrix BM**1** has a smaller area than the region of the first pixel electrode **121** exposed by the opening OP**1***a* of the pixel defining film **130**, external light L**3***a* may have the same form as light L**3***b* reflected by the first pixel electrode **121**. Thus, the organic light emitting display device according to another embodiment of the present inventive concept may alleviate reflected color separation due to external light.

[0091] Also, the opening OP**2***b* of the black matrix BM**1** may have a circular shape. Thus, even when the external light L**3***a* is reflected by the first pixel electrode **121**, the organic light emitting display device may omnidirectionally and uniformly induce diffraction of the reflected light L**3***b*. Thus, the organic light emitting display device according to another embodiment of the present inventive concept may alleviate color separation due to external light.

[0092] Meanwhile, as long as the opening OP**2***b* of the black matrix BM**1** has a smaller area than the opening OP**1***a* of the pixel defining film **130**, the shape of the opening OP**2***b* of the black matrix BM**1** is not limited to a circular shape. This will be described below in detail with reference to FIGS. **9**A and **9**B. For convenience of description in FIGS. **9**A and **9**B, the reference numerals of all the black matrices will be marked as "BM**1**."

[0093] FIGS. **9**A and **9**B is a view showing examples of the shape of the opening of the black matrix shown in FIG. **7**. Referring to FIG. **9**A, an opening OP**2***c* of the black matrix BM**1** may have a polygonal shape close to a circular shape. Alternatively, referring to FIG. **9**B, an opening OP**2***d* of the black matrix BM**1** may have a quadrangular shape.

[0094] The shape of the opening of the black matrix BM**1** is not limited to those shown in FIGS. **8** and **9**, and the opening of the black matrix. BM**1** may be formed in various shapes (such as an ellipse, a rhombus, and a parallelogram) in consideration of a required aperture ratio, required reflectivity, process conditions, and so on.

[0095] Also, a plurality of openings of the black matrix BM**1** may have different shapes and areas. For example, the plurality of openings of the black matrix BM**1** may have different shapes and areas depending on the type of an overlapping color filter. As an example, the diffraction degrees of wavelengths included in the external light (red>green>blue) and the brightness and lifespan of the organic light emitting layer are different. Thus, the shapes and areas of the plurality of openings of the black matrix BM**1** may be determined in consideration of the difference. As an example, an opening overlapping with a green color filter among the plurality of openings of the black matrix BM**1** may have relatively the smallest area.

[0096] FIG. **10** is a view showing an interval between openings of a pixel defining film adjacent to an organic light emitting display device according to another embodiment of the present inventive concept. The following description with reference to FIG. **10** is based on a reference pixel PX_ref overlapping with a reference color filter CF_ref.

[0097] Referring to FIG. **10**, an opening OP**2**_ref of a black matrix BM_ref has a smaller area than an opening OP**1**_ref of a pixel defining film. That is, the opening OP**2**_ref of the black matrix BM_ref may fully overlap with a region of a pixel electrode PE exposed by the opening OP**1**¯ref of the pixel defining film.

[0098] Thus, since the opening OP**2**_ref of the black matrix BM_ref has a smaller area than the pixel electrode PE capable of reflecting external light, the external light and light reflected by the pixel electrode PE may have the same form. Also, the opening OP**2***b*_ref of the black matrix BM_ref may have a circular shape. Accordingly, the organic light emitting display device according to another embodiment of the present inventive concept may alleviate reflected color separation due to external light.

[0099] Referring to FIG. **10**, shortest distances d between the opening OP**1**_ref of the pixel defining film for exposing the pixel electrode PE and openings of adjacent pixel defining films may be the same as each other. Here, openings adjacent in a first direction d**1** and a third direction d**3** with reference to FIG. **10** are excluded from the openings of the adjacent pixel defining films.

[0100] When the shortest distances d between the opening OP**1**_ref of the pixel defining film for exposing the pixel electrode PE and openings of adjacent pixel defining films are different from each other, color crosstalk may occur between two adjacent pixels having a relatively small shortest distance d. As a result, colors in the two adjacent pixels may be mixed with each other.

[0101] With the organic light emitting display device shown in FIG. **10**, the shortest distances d between the opening OP**1**_ref of the pixel defining film for exposing the pixel electrode PE and openings of adjacent pixel defining films may be the same, and thus it is possible to alleviate color crosstalk between adjacent pixels. As another example, in addition to the case where the opening OP**2**_ref of the black matrix BM_ref has a smaller area than the opening OP**1**_ref of the pixel defining film (i.e., even when the area of the opening OP**2**_ref of the black matrix BM_ref is larger than or equal to the area of the opening OP**1**_ref of the pixel defining film), the shortest distances d between the opening OP**1**_ref of the pixel defining film and openings of adjacent pixel defining films may be the same.

[0102] FIG. **11** is a plan view showing a pixel layout of an organic light emitting display device according to another embodiment of the present inventive concept. FIG. **12** is a sectional view taken along line III-III' shown in FIG. **11**. However, duplicate content of the foregoing description with reference to FIGS. **1** to **10** will be omitted in the following description.

[0103] Referring to FIGS. **11** and **12**, an opening OP**1***b* of a pixel defining film **130***a* may have a circular shape. Also, an opening OP**2***a* of a black matrix BM may have a substantially circular shape. That is, the opening OP**1***b* of the pixel defining film **130***a* and the opening OP**2***a* of the black

matrix BM have circular shapes, and thus it is possible to omnidirectionally disperse light L**1** reflected by a first pixel electrode **121**. That is, the organic light emitting display device according to another embodiment of the present inventive concept may omnidirectionally and uniformly induce diffraction of the light L**1** reflected by the first pixel electrode **121**, and thus it is possible to alleviate color separation due to external light and visibility degradation due to reflection of external light.

[0104] Meanwhile, in FIGS. **11** and **12**, the opening OP**1***b* of the pixel defining film **130***a* and the opening OP**2***a* of the black matrix BM are shown as having the same area, but are not limited thereto. As an example, the opening OP**2***a* of the black matrix BM may have a smaller area than the opening OP**1***b* of the pixel defining film **130***a*. Thus, the external light and the light reflected by the first pixel electrode **121** may have the same form.

[0105] FIG. **13** is a plan view showing an opening of a black matrix and a color filter of an organic light emitting display device according to another embodiment of the present inventive concept. For convenience of description, the remaining elements other than a color filter and an opening of a black matrix will be omitted in FIG. **13**.

[0106] Referring to FIG. **13**, a first color filter CFa**1** and a third color filter CFa**3** may have a quadrangular shape. A second color filter CFa**2** may be formed overall along the same column, other than an opening OP**2***e* of a black matrix BM**2**.

[0107] Here, as an example, the first color filter CFa**1** may be a red color filter, and the second color filter CFa**2** may be a green color filter. Also, as an example, the third color filter CFa**3** may be a blue color filter. Locations of the first color filter CFa**1** and the third color filter CFa**3** may be exchangeable with each other.

[0108] That is, the organic light emitting display device according to another embodiment of the present inventive concept shown in FIG. **13** is different from the organic light emitting display device according to an embodiment shown in FIG. **1** in terms of the shapes of the color filters. However, even in this case, the opening OP**2***e* of the black matrix BM**2** may have a circular shape.

[0109] Thus, even when external light is reflected by a plurality of pixel electrodes, it is possible to omnidirectionally and uniformly induce diffraction of the reflected light. Accordingly, with the organic light emitting display device according to another embodiment of the present inventive concept, it is possible to alleviate color separation due to external light and visibility degradation due to external light reflection.

[0110] FIG. **14** is a plan view showing an opening of a black matrix and a color filter of an organic light emitting display device according to still another embodiment of the present inventive concept. FIG. **15** is a plan view showing a color filter and an opening of a black matrix of an organic light emitting display device according to a comparative example. For convenience of description, only a black matrix, an opening of the black matrix, and a color filter have been shown in FIGS. **14** and **15**.

[0111] Referring to FIG. **14**, a color filter CF**1***b* may sufficiently overlap with a black matrix BM**3**. Thus, light L**4** reflected through a pixel electrode or the like may minimize diffraction in a side portion (an edge region) of the color filter CFR). As an example, an overlap distance t**1** between the color filter CF**1***b* and the black matrix BM**3** may range from about 6 μm to about 12 μm.

[0112] On the other hand, referring to FIG. **15**, an organic light emitting display device according to a comparative example includes a black matrix BMa having a rhombic opening BM_OP and a quadrangular color filter CFa. That is, the organic light emitting display device according to the comparative example has a short overlap distance t**2** between the color filter CFa and the black matrix BMa. Thus, diffraction of reflected light L**5** may occur in a side portion of the color filter CFa. When the diffraction of the reflected light L**5** occurs, color separation and visibility degradation may occur.

[0113] Meanwhile, as long as the color filter CF**1***b* sufficiently overlaps with the black matrix BM**3**, an opening OP**2***f* of the black matrix BM**3** need not have the same shape as the color filter CF**1***b*.

[0114] Even when the opening of the black matrix BM**3** has a circular shape, the overlap distance t**1** between the color filter CF**1***b* and the black matrix BM**3** may range, for example, from about 6 μm to about 12 μm.

[0115] FIG. **16** is a plan view showing a pixel layout of an organic light emitting display device according to another embodiment of the present inventive concept. FIG. **17** is a sectional view taken along line IV**1**-IV**1**', line IV**2**-IV**2**', and line IV**3**-IV**3**' shown in FIG. **16**. In FIGS. **16** and **17**, a first pixel PX**1***a*, a second pixel PX**2***a*, and a third pixel PX**3***a* will be described as an example. However, duplicate content of the foregoing description with reference to FIGS. **1** to **15** will be omitted in the following description. Also, an opening of a first color filter layer CFL**1** will not be shown in FIG. **16** in order to avoid confusion with other elements.

[0116] Referring to FIGS. **16** and **17**, the first color filter layer CFL**1** may be disposed on a black matrix BM. The first color filter layer CFL**1** may include a plurality of openings having a first opening OP**3***a***1** and a second opening OP**3***a***2**. Also, the first color filter layer CFL**1** overlaps with a third organic light emitting layer **143**, an opening OP**1***a***3** of a pixel defining film **130**, and an opening OP**2***a***3** of the black matrix BM. That is, the first color filter layer CFL**1** may be disposed on the black matrix BM to cover an entire surface of the black matrix BM except regions of the plurality of openings.

[0117] More specifically, the first color filter layer CFL**1** may be formed to surround openings OP**2***a***1** and OP**2***a***2** of the black matrix BM when viewed from the top.

[0118] As an example, the first color filter layer CFL**1** may be a blue color filter layer selectively transmitting blue light. Thus, the third pixel PX**3***a* may display a blue color.

[0119] A first color filter CF**1***a* may be disposed on the first color filter layer CFL**1**. The first color filter CF**1***a* may overlap with a first organic light emitting layer **141**, an opening OP**1***a***1** of the pixel defining film **130**, and the opening OP**2***a***1** of the black matrix BM. As an example, the first color filter CF**1***a* may be a red color filter selectively transmitting red light. Thus, the first pixel PX**1***a* may display a red color.

[0120] A second color filter CF**2***a* may be disposed on the first color filter layer CFL**1**. The second color filter CF**2***a* may overlap with a second organic light emitting layer **142**, an opening OP**1***a***2** of the pixel defining film **130**, and the opening OP**2***a***2** of the black matrix BM. As an example, the

second color filter CF2*a* may be a green color filter selectively transmitting green light. Thus, the second pixel PX2*a* may display a green color.

[0121] The first color filter CF1*a* and the second color filter CF2*a* are not formed overall on the black matrix BM, unlike the first cc for filter layer CFL1.

[0122] FIG. **18** is a diagram illustrating an improvement of reflective dispersion of the organic light emitting display device shown in FIG. **16**.

[0123] Referring to FIGS. **16** to **18**, after the first color filter layer CFL1 is formed, the first color filter CF1*a* and the second color filter CF2*a* are formed on the first color filter layer CFL1. The first color filter layer CFL1 is formed overall on the black matrix BM, and the first color filter CF1*a* and the second color filter CF2*a* are formed in an island shape to at least partially overlap with the first color filter layer CFL1. Thus, the black matrix BM may not include an exposed region. Thus, even when at least one of the first color filter CF1*a* and the second color filter CF2*a* is misaligned with respect to a center line SL1 or SL2 during a process an exposed area of the black matrix BM may be maintained at a constant value because the first color filter layer CFL1 is formed to cover an entire surface of the black matrix BM except regions of the plurality of openings. Here, the degree to which the first color filter CF1*a* and the first color filter layer CFL1 overlap with each other and the degree to which the second color filter CF2*a* and the first color filter layer CFL1 overlap with each other may be determined in consideration of color crosstalk and design margins.

[0124] That is, since the first color filter layer CFL1 is formed to cover an entire surface of the black matrix BM except regions of the plurality of openings, a region in which the first color filter layer CFL1 and the black matrix BM are exposed may be maintained in a displayed region DA3 although at least one of the first color filter CF1*a* and the second color filter CF2*a* is misaligned with respect to the center line SL1 or SL2.

[0125] When an area in which the black matrix BM is exposed is different for each location during the process, a dispersion imbalance may occur for each location. This also means that reflectivity of external light may change for each location.

[0126] With the organic light emitting display device according to another embodiment of the present inventive concept, it is possible to alleviate a dispersion imbalance and a reflectivity difference for each region by maintaining the region in which the first color filter layer CFL1 and the black matrix BM are exposed in the displayed region DA3.

[0127] The openings OP2*a*1, OP2*a*2, and OP2*a*3 of the black matrix BM may have a circular shape. That is, since the openings OP2*a*1, OP2*a*2, and OP2*a*3 of the black matrix BM have a circular shape, the organic light emitting display device may omnidirectionally and uniformly induce light diffraction. Thus, even when external light is reflected by first to third pixel electrodes **121** to **123**, the organic light emitting display device may omnidirectionally and uniformly induce light diffraction. Accordingly, with the organic light emitting display device according to another embodiment of the present inventive concept, it is possible to alleviate color separation due to external light and visibility degradation due to external light reflection.

[0128] FIGS. **19** to **26** are diagrams illustrating a process of manufacturing the organic light emitting display device shown in FIG. **16**. However, duplicate content of the foregoing description with reference to FIGS. **16** to **18** will be omitted in the following description.

[0129] Referring to FIGS. **19** to **22**, a black matrix BM may be formed oil an encapsulation layer **160**. The black matrix BM may be disposed on the encapsulation layer **160** except regions of a plurality of openings including openings OP2*a*1, OP2*a*2, and OP2*a*3. A material with high absorption for visible light may be used for the black matrix BM. Although not shown, a buffer layer or an organic layer may be formed between the black matrix BM and the encapsulation layer **160**. The buffer layer or the organic layer may be formed in a single-layered structure or a multi-layered structure.

[0130] Referring to FIGS. **23** and **24**, a first color filter layer CFL1 may be disposed on the black matrix BM. The first color filter layer CFL1 may be formed overall on the black matrix BM except regions of a plurality of openings having a first opening OP3*a*1 and a second opening OP3*a*2.

[0131] Referring to FIGS. **25** and **26**, a first color filter CF1*a* and a second color filter CF2*a* may be sequentially formed on the first color filter layer CFL1. The first color filter CF1*a* may be formed to cover the first opening OP3*a*1 of the first color filter layer CFL1. The second color filter CF2*a* may be formed to cover the second opening OP3*a*2 of the first color filter layer CFL1. The order in which the first color filter CF1*a* and the second color filter CF2*a* are formed is not particularly limited.

[0132] A method of forming the first color filter layer CFL1, the first color filter CF1*a*, and the second color filter CF2*a* is not particularly limited. For example, the first color filter layer CFL1, the first color filter CF1*a*, and the second color filter CF2*a* may be formed through a photo lithography process or an inkjet process. Also, the first color filter layer CFL1, the first color filter CF1*a*, and the second color filter CF2*a* need not be formed through the same process. For example, the first color filter layer CFL1 may include a polymer material as the first color filter layer CFL1 is formed through the photo process. Thus, the first color filter CF1*a* and the second color filter CF2*a* may include an ink material as the first color filter CF1*a* and the second color filter CF2*a* are formed through the inkjet process.

[0133] An organic light emitting display device having a low-reflection and no-change structure according to another embodiment will be described below with reference to FIGS. **27** to **30**. For comparison with FIG. **17**, the following description will be provided with reference to the sectional views of FIGS. **27** to **30**. However, duplicate content of the foregoing description with reference to FIGS. **16** to **26** will be omitted in the following description.

[0134] FIG. **27** is a sectional view showing an organic light emitting display device according to another embodiment of the present inventive concept.

[0135] Referring to FIG. **27**, a second color filter layer CFL2 may be disposed on a first color filter layer CFL1. The second color filter layer CFL2 may include a plurality of openings having a first opening OP4*a*1 and a second opening OP4*a*2. Also, the second color filter layer CFL2 overlaps with a first organic light emitting layer **141**, an opening OP1*a*1 of a pixel defining film **130**, and an opening OP2*a*1 of a black matrix BM. That is, the second color filter layer CFL2 may be formed to cover an entire surface of the first

color filter layer CFL**1** except regions of the plurality of openings having a first opening OP**4***a***1** and a second opening OP**4***a***2**.

[0136] More specifically, the second color filter layer CFL**2** may be formed to surround openings OP**2***a***2** and OP**2***a***3** of the black matrix BM when viewed from the top. In other words, the second color filter layer CFL**2** may be formed to surround openings OP**3***a***1** and OP**3***a***2** of the first color filter layer CFL**1** when viewed from the top.

[0137] That is, the second color filter layer CFL**2** is formed to cover an entire surface of the first color filter layer CFL**1** except regions of the second opening OP**4***a***2**. At this point, the second color filter layer CFL**2** covers the opening OP**2***a***1** of the black matrix BM. As an example, the second color filter layer CFL**2** may be a red color filter layer selectively transmitting red light. Thus, a first pixel PX**1***a* may display a red color.

[0138] A second color filter CF**2***a* may be disposed on the second color filter layer CFL**2**. The second color filter CF**2***a* may overlap with a second organic light emitting layer **142**, an opening OP**1***a***2** of the pixel defining film **130**, and the opening OP**2***a***2** of the black matrix BM. As an example, the second color filter CF**2***a* may be a green color filter selectively transmitting green light. Thus, a second pixel PX**2***a* may display a green color.

[0139] That is, the organic light emitting display device shown in FIG. **27** may include the second color filter layer CFL**2** instead of the first color filter CF**1***a*.

[0140] FIG. **28** is a sectional view showing an organic light emitting display device according to another embodiment of the present inventive concept.

[0141] Referring to FIG. **28**, a third color filter layer CFL**3** may be disposed on the second color filter layer CFL**2**. The third color filter layer CFL**3** may include a plurality of openings having a first opening OP**5***a***1** and a second opening OP**5***a***2**. Also, the third color filter layer CFL**3** overlaps with the second organic light emitting layer **142**, the opening OP**1***a***2** of the pixel defining film **130**, and the opening OP**2***a***2** of the black matrix BM. That is, the third color filter layer CFL**3** may be formed to cover an entire surface of the second color filter layer CFL**2** except regions of a plurality of first openings OP**5***a***1** and a plurality of second openings OP**5***a***2**.

[0142] More specifically, the third color filter layer CFL**3** may be formed to surround the openings OP**2***a***1** and OP**2***a***3** of the black matrix BM when viewed from the top.

[0143] As an example, the third color filter layer CFL**3** may be a green color filter layer selectively transmitting green light. Thus, the second pixel PX**2***a* may display a green color.

[0144] That is, the organic light emitting display device shown in FIG. **28** may include the third color filter layer CFL**3** instead of the second color filter CF**2***a*.

[0145] FIG. **29** is a sectional view showing an organic light emitting display device according to another embodiment of the present inventive concept.

[0146] Referring to FIG. **29**, a fourth color filter CF**4** may be disposed on the first color filter layer CFL**1**. The fourth color filter CF**4** may overlap with the first organic light emitting layer **141**, the second organic light emitting layer **142**, the openings OP**1***a***1** and OP**1***a***2** of the pixel defining film **130**, and the openings OP**2***a***1** and OP**2***a***2** of the black matrix BM. As an example, the fourth color filter CF**4** may be a yellow color filter selectively transmitting yellow light.

[0147] The types of the colors of the first color filter layer CFL**1**, the second color filter layer CFL**2**, and the third color filter layer CFL**3** and the order in which the first color filter layer CFL**1**, the second color filter layer CFL**2**, and the third color filter layer CFL**3** are formed are not particularly limited. However, when the first color filter layer CFL**1** formed on the lowest portion among the color filters or the color filter layers is a blue color filter layer having relatively low transmissivity, it is possible to enhance quality of displayed images. Also, the first color filter layer CFL**1**, the second color filter layer CFL**2**, and the third color filter layer CFL**3** have been described as a blue color filter layer, a red color filter layer, and a green color filter layer, respectively, but are not limited thereto. For example, each of the first color filter layer CFL**1**, the second color filter layer CFL**2**, and the third color filter layer CFL**3** may be any one of a cyan color filter layer, a magenta color filter layer, and a yellow color filter layer.

[0148] FIG. **30** is a sectional view showing an organic light emitting display device according to another embodiment of the present inventive concept.

[0149] Referring to FIG. **30**, unlike FIG. **17**, a first color filter CF**1***c* and a second color filter CF**2***c* may be formed before a first color filter layer CFL**1***a* is formed. That is, the first color filter CF**1***c* and the second color filter CF**2***c* may be sequentially formed on a black matrix BM, and the first color filter layer CFL**1***a* may be formed to cover an entire surface of the remaining regions other than regions where the first color filter CF**1***a* and the second color filter CF**2***a* are disposed. That is, the first color filter layer CFL**1***a* may be formed to surround openings OP**2***a***1** and OP**2***a***2** of the black matrix BM when viewed from the top.

[0150] FIG. **31** is a plan view showing a pixel layout of an organic light emitting display device according to still another embodiment of the present inventive concept. FIG. **32** is a sectional view taken along line V**1**-V**1**', line V**2**-V**2**', and line V**3**-V**3**' shown in FIG. **31**.

[0151] Referring to FIGS. **31** and **32**, openings OP**2***b***1**, OP**2***b***2**, and OP**2***b***3** of a black matrix BM**1***a* have smaller areas than openings OP**1***a***1**, OP**1***a***2**, and OP**1***a***3** of a pixel defining film **130**. That is, the openings OP**2***b***1**, OP**2***b***2**, and OP**2***b***3** of the black matrix BM**1***a* may fully overlap with regions of a first pixel electrode **121** exposed by the openings OP**1***a***1**, OP**1***a***2**, and OP**1***a***3** of the pixel defining film **130**.

[0152] Accordingly, since the openings OP**2***b***1**, OP**2***b***2**, and OP**2***b***3** of the black matrix BM**1***a* have smaller areas than regions of the first pixel electrode **121**, a second pixel electrode **122**, and a third pixel electrode **123** exposed by the openings OP**1***a***1**, OP**1***a***2**, and OP**1***a***3** of the pixel defining film **130**, external light may have the same form as light reflected by the first pixel electrode **121**, the second pixel electrode **122**, and the third pixel electrode **123**.

[0153] Also, the openings OP**2***b***1**, OP**2***b***2**, and OP**2***b***3** of the black matrix BM**1***a* may have a circular shape. Thus, even when external light is reflected by at least one of the first pixel electrode **121**, the second pixel electrode **122**, and the third pixel electrode **123**, it is possible to omnidirectionally and uniformly induce diffraction of reflected light. Accordingly, with the organic light emitting display device according to still another embodiment of the present inventive concept, it is possible to alleviate color separation due to external light and visibility degradation due to external light reflection.

[0154] As long as the openings OP**2***b***1**, OP**2***b***2**, and OP**2***b***3** of the black matrix BM**1***a* have smaller areas than the openings OP**1***a***1**, OP**1***a***2**, and OP**1***a***3** of the pixel defining film **130**, the openings OP**2***b***1**, OP**2***b***2**, and OP**2***b***3** of the black matrix BM**1***a* are not limited to a circular shape.

[0155] Meanwhile, in FIGS. **16** to **32**, the opening of the first color filter layer CFL**1** is shown as having the same size as the first color filter CF**1***a* or the second color filter CF**2***a*. However, this is for convenience of description, and the present inventive concept is not limited thereto.

[0156] According to embodiments of the present inventive concept, it is possible to alleviate reflected color separation due to external light.

[0157] It is also possible to reduce costs by using no polarizing plate.

[0158] It is also possible to implement uniform dispersion characteristics and reduce reflectivity.

What is claimed is:

1. An organic light emitting display device comprising:

a substrate;

a first pixel electrode disposed on the substrate;

a pixel defining film disposed on the first pixel electrode and having a first opening at least partially exposing the first pixel electrode;

a first organic light emitting layer disposed on the pixel defining film and overlapping with the first opening of the pixel defining film; and

a black matrix disposed on the first organic light emitting layer and having a first opening overlapping with the first organic light emitting layer,

wherein light having passed through the first opening of the black matrix is one of red light, green light, and blue light, and

wherein the first opening of the black matrix has a shape with a curved portion.

2. The organic light emitting display device of claim **1**, wherein the first opening of the black matrix is substantially circular.

3. The organic light emitting display device of claim **1**, wherein the first opening of the black matrix has a smaller area than the first opening of the pixel defining film.

4. The organic light emitting display device of claim **1**, further comprising a color filter disposed to cover the first opening of the black matrix.

5. The organic light emitting display device of claim **4**, further comprising an encapsulation layer disposed on the pixel defining film,

wherein the black matrix and the color filter are disposed on the encapsulation layer.

6. The organic light emitting display device of claim **4**, wherein when a width of a region in which the black matrix overlaps with one side of the color filter is defined as an overlap distance, the overlap distance ranges from 6 μm to 12 μm.

7. The organic light emitting display device of claim **1**, wherein the first opening of the pixel defining film is substantially circular.

8. The organic light emitting display device of claim **1**, further comprising:

a second pixel electrode disposed on the same layer as the first pixel electrode; and

a second organic light emitting layer disposed on the pixel defining film and overlapping with the second pixel electrode,

wherein the pixel defining film further comprises a second opening at least partially exposing the second pixel electrode,

wherein the black matrix further comprises a second opening overlapping with the second organic light emitting layer, and

wherein light having passed through the second opening of the black matrix has a different display color from the light having passed through the first opening of the black matrix.

9. The organic light emitting display device of claim **8**, wherein the second opening of the black matrix has a shape with a curved portion.

10. The organic light emitting display device of claim **8**, further comprising:

a third pixel electrode disposed on the same layer as the first pixel electrode; and

a third organic light emitting layer disposed on the pixel defining film and overlapping with the third pixel electrode,

wherein the pixel defining film further comprises a third opening at least partially exposing the third pixel electrode,

wherein the black matrix further comprises a third opening overlapping with the third organic light emitting layer, and

wherein light having passed through the third opening of the black matrix, the light having passed through the first opening of the black matrix, and the light having passed through the second opening of the black matrix have different display colors.

11. The organic light emitting display device of claim **10**, wherein a shortest distance from the second opening of the pixel defining film to the first opening of the pixel defining film is the same as a shortest distance from the second opening of the pixel defining film to the third opening of the pixel defining film.

12. The organic light emitting display device of claim **10**, further comprising a first color filter layer disposed on the black matrix and including a first opening overlapping with the first opening of the black matrix and a second opening overlapping with the second opening of the black matrix,

wherein the first color filter layer overlaps with the third opening of the black matrix and surrounds the first opening of the black matrix and the second opening of the black matrix.

13. The organic light emitting display device of claim **12**, wherein the first color filter layer is a blue color filter layer for transmitting blue light.

14. The organic light emitting display device of claim **12**, further comprising:

a first color filter overlapping with the first opening of the first color filter layer; and

a second color filter overlapping with the second opening of the first color filter layer.

15. The organic light emitting display device of claim **12**, further comprising a second color filter layer disposed on the first color filter layer and overlapping with the first opening of the black matrix,

wherein the second color filter layer surrounds the second opening of the first color filter layer.

16. The organic light emitting display device of claim **10**, further comprising:

a first color filter overlapping with the first opening of the black matrix;

a second color filter overlapping with the second opening of the black matrix; and

a first color filter layer disposed on the first color filter and the second color filter,

wherein the first color filter layer overlaps with the third opening of the black matrix and surrounds the first opening of the black matrix and the second opening of the black matrix.

17. An organic light emitting display device comprising:

a substrate;

a first pixel electrode disposed on the substrate;

a pixel defining film disposed on the first pixel electrode and having a first opening at least partially exposing the first pixel electrode;

a first organic light emitting layer disposed on the pixel defining film and overlapping with the first opening of the pixel defining film; and

a black matrix disposed on the first organic light emitting layer and having a first opening overlapping with the first organic light emitting layer,

wherein the first opening of the back matrix has a smaller area than the first opening of the pixel defining film.

18. The organic light emitting display device of claim **17**, wherein the first opening of the black matrix has a shape with a curved portion.

19. The organic light emitting display device of claim **17**, wherein the first opening of the black matrix is substantially circular.

20. The organic light emitting display device of claim **17**, wherein the first opening of the pixel defining film is substantially circular.

21. The organic light emitting display device of claim **17**, wherein light having passed through the first opening of the black matrix is one of red light, green light, and blue light.

22. The organic light emitting display device of claim **17**, further comprising a first color filter disposed to cover the first opening of the black matrix,

wherein when a width of a region in which the black matrix overlaps with one side of the first color filter is defined as an overlap distance, the overlap distance ranges from 6 μm to 12 μm.

23. The organic light emitting display device of claim **17**, further comprising a second pixel electrode and a third pixel electrode disposed on the same layer as the first pixel electrode,

wherein the pixel defining film further comprises a second opening at least partially exposing the second pixel electrode and a third opening at least partially exposing the third pixel electrode,

wherein the black matrix further comprises a second opening overlapping with the second pixel electrode and a third opening overlapping with the third pixel electrode, and

wherein light having passed through the first opening of the black matrix, light having passed through the second opening of the black matrix, and light having passed through the third opening of the black matrix have different display colors from one another.

24. The organic light emitting display device of claim **23**, further comprising a first color filter layer disposed on the black matrix and including a first opening overlapping with the first opening of the black matrix and a second opening overlapping with the second opening of the black matrix,

wherein the first color filter layer overlaps with the third opening of the black matrix and surrounds the first opening of the black matrix and the second opening of the black matrix.

25. The organic light emitting display device of claim **24**, wherein the first color filter layer is a blue color filter layer for transmitting blue light.

26. The organic light emitting display device of claim **24**, further comprising a yellow color filter overlapping with the first opening and the second opening of the first color filter layer.

27. The organic light emitting display device of claim **24**, further comprising a second color filter layer disposed on the first color filter layer and overlapping with the first opening of the black matrix.

* * * * *

专利名称(译)	有机发光显示装置		
公开(公告)号	US20190013363A1	公开(公告)日	2019-01-10
申请号	US15/898346	申请日	2018-02-16
[标]申请(专利权)人(译)	三星显示有限公司		
申请(专利权)人(译)	SAMSUNG DISPLAY CO.LTD.		
当前申请(专利权)人(译)	SAMSUNG DISPLAY CO.LTD.		
[标]发明人	JOO SUN KYU KIM BYUNG CHUL KIM SUNG CHUL KIM SU JEONG KIM IN OK MUN HYE RAN SONG IN SEOK OH KEUN CHAN LYU JAE JIN LEE YUI KU		
发明人	JOO, SUN KYU KIM, BYUNG CHUL KIM, SUNG CHUL KIM, SU JEONG KIM, IN OK MUN, HYE RAN SONG, IN SEOK OH, KEUN CHAN LYU, JAE JIN LEE, YUI KU		
IPC分类号	H01L27/32 H01L51/50 H01L51/52 H01L51/56		
CPC分类号	H01L27/322 H01L51/5056 H01L51/5092 H01L27/3211 H01L51/5203 H01L51/56 H01L51/5072 H01L27/3246 H01L27/3272 H01L27/326 H01L27/3283 H01L51/5284		
优先权	1020170085074 2017-07-04 KR		
外部链接	Espacenet USPTO		

摘要(译)

一种有机发光显示装置，包括：基板;第一像素电极设置在基板上;像素限定膜，设置在第一像素电极上并具有至少部分地暴露第一像素电极的第一开口;第一有机发光层，设置在像素限定膜上并与像素限定膜的第一开口重叠;黑矩阵，设置在第一有机发光层上，并具有与第一有机发光层重叠的第一开口。已经穿过黑色矩阵的第一开口的光是红光，绿光和蓝光中的一种。黑色矩阵的第一开口可以具有带有弯曲部分的形状。

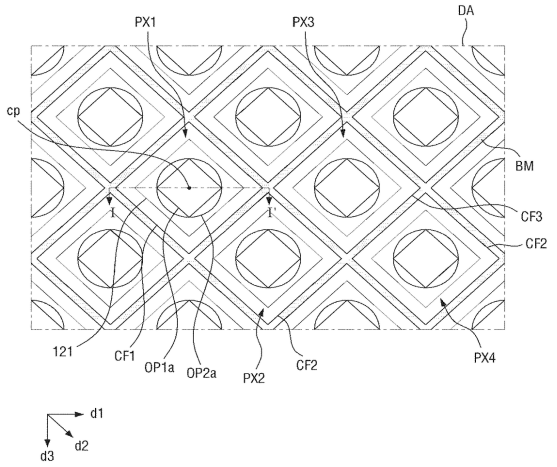
PX1
PX3
DA
cp
BM
CF3
CF2
I
I'
121
CF1
OP1a
OP2a
PX2
CF2
PX4
d1
d2
d3